SUBJECT PAGE NO.

7.1 FASTENER TORQUE VALUES..... 7-1
7.2 SPECIFICATIONS: ELECTRICAL..... 7-4
7.3 ELECTRICAL CADDY..... 7-5
7.4 ELECTRONIC CONTROL MODULE (ECM)..... 7-8
7.5 BODY CONTROL MODULE (BCM)..... 7-9
7.6 SECURITY SIREN..... 7-11
7.7 SPARK PLUG CABLES..... 7-12
7.8 FUSES..... 7-13
7.9 IGNITION SWITCH..... 7-14
7.10 BATTERY TRAY AND BATTERY CABLES..... 7-17
7.11 STARTER..... 7-20
7.12 HEADLAMP..... 7-24
7.13 TAIL LAMP..... 7-31
7.14 TURN SIGNALS..... 7-36
7.15 CRANK POSITION SENSOR (CKP)..... 7-43
7.16 AUTOMATIC COMPRESSION RELEASE (ACR)..... 7-44
7.17 VOLTAGE REGULATOR..... 7-46
7.18 ALTERNATOR..... 7-47
7.19 FUEL GAUGE..... 7-49
7.20 FUEL GAUGE SENDER..... 7-50
7.21 INSTRUMENTS: FXDF AND FLD..... 7-53
7.22 INSTRUMENTS: FXDB, FXDBC, FXDBP AND FXDWG..... 7-54
7.23 INSTRUMENTS: FXDL..... 7-56
7.24 VEHICLE SPEED SENSOR (VSS)..... 7-57
7.25 WHEEL SPEED SENSORS..... 7-58
7.26 INDICATOR LAMPS..... 7-62
7.27 NEUTRAL SWITCH..... 7-64
7.28 OIL PRESSURE SWITCH..... 7-65
7.29 REAR STOPLAMP SWITCH..... 7-66
7.30 HORN..... 7-67
7.31 ACTIVE EXHAUST: HDI..... 7-69
7.32 MAIN WIRING HARNESS..... 7-71
7.33 HANDLEBAR CONTROL MODULES..... 7-77
7.34 LEFT HANDLEBAR CONTROL MODULE..... 7-78
7.35 RIGHT HANDLEBAR CONTROL MODULE..... 7-80
7.36 H-DSSS MAINTENANCE..... 7-83
7.37 PERSONAL IDENTIFICATION NUMBER (PIN)..... 7-84
7.38 H-DSSS ACTUATION..... 7-86

NOTES

FASTENER TORQUE VALUES IN THIS CHAPTER

The table below lists torque values for all fasteners presented in this chapter.

FASTENER	TORQUE VALUE		NOTES
ABS module bracket	90-114 **in-lbs**	10.2-12.8 Nm	7.11 STARTER, Installation
ABS module bracket	90-114 **in-lbs**	10.2-12.8 Nm	7.32 MAIN WIRING HARNESS, Installation
ACR	13-17 ft-lbs	17.6-23.0 Nm	7.16 AUTOMATIC COMPRESSION RELEASE (ACR), Installation/Apply three equally spaced dots of LOCTITE 246 MEDIUM STRENGTH/HIGH TEMPERATURE THREADLOCKER (blue) around lower third of threads
Active exhaust cable clip screw	24-48 **in-lbs**	2.7-5.4 Nm	7.31 ACTIVE EXHAUST: HDI, Installation
Active exhaust module fasteners	36-60 **in-lbs**	4.0-6.8 Nm	7.31 ACTIVE EXHAUST: HDI, Installation
Battery tray screws	96-120 **in-lbs**	10.8-13.6 Nm	7.10 BATTERY TRAY AND BATTERY CABLES, Battery Tray
Brake line clamp fastener: FXDL	45-65 **in-lbs**	5.1-7.3 Nm	7.12 HEADLAMP, Headlamp Visor: FXDL
CKP sensor screw	90-120 **in-lbs**	10.1-13.6 Nm	7.15 CRANK POSITION SENSOR (CKP), Installation
Clutch cable guide fastener: FXDL	45-65 **in-lbs**	5.1-7.3 Nm	7.12 HEADLAMP, Headlamp Visor: FXDL
Console back clamp screw	10-20 **in-lbs**	1.1-2.3 Nm	7.23 INSTRUMENTS: FXDL, Installation
Console mounting screws	41-49 **in-lbs**	4.6-5.5 Nm	7.9 IGNITION SWITCH, Installation
Console mounting screws: FLD	41-49 **in-lbs**	4.6-5.5 Nm	7.26 INDICATOR LAMPS, Installation
Console mounting screws: FXDB, FXDBC, FXDBP, FXDWG and FXDF	41-49 **in-lbs**	4.6-5.5 Nm	7.26 INDICATOR LAMPS, Installation
Console mounting screws: FXDF, FLD	41-49 **in-lbs**	4.6-5.5 Nm	7.21 INSTRUMENTS: FXDF AND FLD, Speedometer
Console to fuel tank fasteners: FXDB, FXDBC, FXDBP and FXDWG	41-49 **in-lbs**	4.6-5.5 Nm	7.22 INSTRUMENTS: FXDB, FXDBC, FXDBP AND FXDWG, Installation
Console to fuel tank fasteners: FXDL	41-49 **in-lbs**	4.6-5.5 Nm	7.23 INSTRUMENTS: FXDL, Installation
Electrical caddy fastener, front	40-60 **in-lbs**	4.5-6.8 Nm	7.3 ELECTRICAL CADDY, Installation
Electrical caddy fasteners, top	90-110 **in-lbs**	10.1-12.4 Nm	7.3 ELECTRICAL CADDY, Installation
Fuel tank trim screw: FXDF, FLD	18-24 **in-lbs**	2.03-2.71 Nm	7.21 INSTRUMENTS: FXDF AND FLD, Speedometer
Hand control module housing screws	35-45 **in-lbs**	4.0-5.1 Nm	7.34 LEFT HANDLEBAR CONTROL MODULE, Installation
Hand control module housing screws	35-45 **in-lbs**	4.0-5.1 Nm	7.35 RIGHT HANDLEBAR CONTROL MODULE, Installation
Handlebar clutch lever clamp screws	60-80 **in-lbs**	6.8-9.0 Nm	7.34 LEFT HANDLEBAR CONTROL MODULE, Installation
Handlebar master cylinder clamp screws	60-80 **in-lbs**	6.8-9.0 Nm	7.35 RIGHT HANDLEBAR CONTROL MODULE, Installation
Handlebar module assembly retainer screws	8-10 **in-lbs**	0.9-1.1 Nm	7.34 LEFT HANDLEBAR CONTROL MODULE, Installation
Handlebar module assembly retainer screws	8-10 **in-lbs**	0.9-1.1 Nm	7.35 RIGHT HANDLEBAR CONTROL MODULE, Installation
Handlebar switch assembly retainer screws	8-10 **in-lbs**	0.9-1.1 Nm	7.34 LEFT HANDLEBAR CONTROL MODULE, Clutch Switch Replacement

FASTENER	TORQUE VALUE		NOTES
Handlebar switch assembly retainer screws	8-10 **in-lbs**	0.9-1.1 Nm	7.35 RIGHT HANDLEBAR CONTROL MODULE, Front Brake Switch Replacement
Headlamp door screw: FLD	9-18 **in-lbs**	1.0-2.0 Nm	7.12 HEADLAMP, Headlamp: FLD
Headlamp screws: FLD	7-10 **in-lbs**	0.8-1.1 Nm	7.12 HEADLAMP, Headlamp: FLD
Headlamp visor bolts: FXDL	30-40 ft-lbs	40.7-54.2 Nm	7.12 HEADLAMP, Headlamp Visor: FXDL
Headlight horizontal adjusting bolt	25-30 ft-lbs	33.9-40.7 Nm	7.12 HEADLAMP, Headlamp Assembly: All But FLD and FXDL
Horn mounting nut	120-180 **in-lbs**	13.6-20.3 Nm	7.30 HORN, Replacement: All But FXDL
Horn mounting nut	80-100 **in-lbs**	9.0-11.3 Nm	7.30 HORN, Replacement: FXDL
Horn mount screw	13-15 ft-lbs	17.6-20.3 Nm	7.30 HORN, Replacement: FXDL
Ignition switch nut	140-160 **in-lbs**	15.8-18.1 Nm	7.9 IGNITION SWITCH, Installation
Ignition switch screws	20-30 **in-lbs**	2.3-3.4 Nm	7.9 IGNITION SWITCH, Installation
Ignition switch set screw	20-26 **in-lbs**	2.3-2.9 Nm	7.9 IGNITION SWITCH, Installation
License bracket screws: FLD	60-80 **in-lbs**	6.8-9.0 Nm	7.14 TURN SIGNALS, Rear Turn Signal Lamps and Bracket: FLD
License plate lamp screws: FXDF	10-17 **in-lbs**	1.1-1.9 Nm	7.13 TAIL LAMP, Tail Lamp Replacement: FXDF
Mirror acorn nut: FLD	84-156 **in-lbs**	9.5-17.6 Nm	7.14 TURN SIGNALS, Front Turn Signal Lamps: FLD
Neutral switch	120-180 **in-lbs**	13.6-20.3 Nm	7.27 NEUTRAL SWITCH, Installation
Oil pressure switch	96-144 **in-lbs**	10.8-16.3 Nm	7.28 OIL PRESSURE SWITCH, Installation
Rear light bar housing screws: FLD	84-144 **in-lbs**	9.5-16.3 Nm	7.14 TURN SIGNALS, Rear Turn Signal Lamps and Bracket: FLD/Use LOCTITE 271 HIGH STRENGTH THREADLOCKER (red)
Rear stop lamp switch	12-15 ft-lbs	16.3-20.3 Nm	7.29 REAR STOPLAMP SWITCH, Installation
Rear turn signal lamp fastener	12-16 ft-lbs	16.3-21.7 Nm	7.14 TURN SIGNALS, Rear Lamp Housing Replacement: All But FLD
Riser clamp fasteners: FXDL	15-19 ft-lbs	20.3-25.8 Nm	7.12 HEADLAMP, Headlamp Visor: FXDL
Solenoid contact post jamnut	65-80 **in-lbs**	7.3-9.0 Nm	7.11 STARTER, Solenoid
Solenoid terminal post nut	70-90 **in-lbs**	7.9-10.2 Nm	7.11 STARTER, Drive Assembly
Speedometer screw: FXDB, FXDBC, FXDBP and FXDWG	10-20 **in-lbs**	1.1-2.3 Nm	7.22 INSTRUMENTS: FXDB, FXDBC, FXDBP AND FXDWG, Installation
Speedometer VSS mounting bolt	84-108 **in-lbs**	9.5-12.2 Nm	7.24 VEHICLE SPEED SENSOR (VSS), Installation
Starter end cover screw	90-110 **in-lbs**	10.2-12.4 Nm	7.11 STARTER, Drive Assembly
Starter mounting fasteners	25-27 ft-lbs	33.9-36.6 Nm	7.11 STARTER, Installation
Starter positive terminal nut	60-80 **in-lbs**	6.8-9.0 Nm	7.10 BATTERY TRAY AND BATTERY CABLES, Battery Cables/metric
Starter positive terminal nut	60-80 **in-lbs**	6.8-9.0 Nm	7.11 STARTER, Installation
Starter ring terminal hex nut	60-80 **in-lbs**	6.8-9.0 Nm	7.11 STARTER, Solenoid
Starter through bolts	39-65 **in-lbs**	4.4-7.3 Nm	7.11 STARTER, Drive Assembly
Stator screws	55-75 **in-lbs**	6.2-8.4 Nm	7.18 ALTERNATOR, Installation/Stator screws, use only once
Tail lamp base screws: FLD, FXDL	40-48 **in-lbs**	4.5-5.4 Nm	7.13 TAIL LAMP, Base Replacement: FLD and FXDL
Tail lamp base screws: FXDWG (HDI and Canada)	66-90 **in-lbs**	7.5-10.1 Nm	7.13 TAIL LAMP, Base Replacement: FXDWG/HDI and Canada
Tail lamp bracket screws: FXDF	60-80 **in-lbs**	6.8-9.0 Nm	7.13 TAIL LAMP, Tail Lamp Replacement: FXDF
Tail lamp lens screws	20-24 **in-lbs**	2.3-2.7 Nm	7.13 TAIL LAMP, Tail Lamp Bulb Replacement: FLD and FXDL

FASTENER	TORQUE VALUE		NOTES
Tail lamp lens screws: FLD, FXDL	20-24 **in-lbs**	2.3-2.7 Nm	7.13 TAIL LAMP, Base Replacement: FLD and FXDL
Tail lamp screws: FXDF	13-18 **in-lbs**	1.4-2.0 Nm	7.13 TAIL LAMP, Tail Lamp Replacement: FXDF
Throttle cable guide fastener: FXDL	45-65 **in-lbs**	5.1-7.3 Nm	7.12 HEADLAMP, Headlamp Visor: FXDL
Top plate fasteners	27-33 **in-lbs**	3.1-3.7 Nm	7.20 FUEL GAUGE SENDER, Installation
Transmission ground stud nut	96-144 **in-lbs**	10.8-16.3 Nm	7.10 BATTERY TRAY AND BATTERY CABLES, Battery Cables
Voltage regulator fasteners	100-120 **in-lbs**	11.2-13.6 Nm	7.17 VOLTAGE REGULATOR, Installation

SPECIFICATIONS

Table 7-1. Ignition

IGNITION	DATA
Idle speed	1000 ± 50 rpm
Spark plug size	12 mm
Spark plug gap	0.038-0.043 in
	0.97-1.09 mm
Ignition coil primary resistance	0.5-0.7 ohms
Ignition coil secondary resistance	5500-7500 ohms

Table 7-2. Fuses

FUSE	AMPS
Main fuse	40
Battery	15
Accessories	15

Table 7-3. Charging System

CHARGING SYSTEM	DATA
Battery	19 A hour/315 CCA
Alternator AC voltage output	16-23 VAC per 1000 rpm
Alternator stator coil resistance	0.1-0.2 ohms
Regulator voltage output @ 3600 rpm	14.3-14.7 VDC @ 75 °F (24 °C)
Regulator amperes @ 3000 rpm	35-50 A

Table 7-4. Starter Specifications

STARTER DATA	
Free speed	3000 rpm (min) @ 11.5 V
Free current	90 A (max) @ 11.5 V
Cranking current	200 A (max) @ 68 °F (20 °C)
Stall torque	8.0 ft-lbs (10.8 Nm) @ 2.4 V

REMOVAL

NOTE

Security siren connector [142] is located under seat in the rear of the electrical caddy.

1. Remove seat.

⚠WARNING

To prevent accidental vehicle start-up, which could cause death or serious injury, disconnect negative (-) battery cable before proceeding. (00048a)

2. Remove battery cover.
3. Disconnect negative battery cable.
4. See Figure 7-1. Remove electrical caddy cover:
   a. Push up on the lower tab securing the electrical caddy cover.
   b. Pull outward on bottom until retainer on cover clears tab.
   c. Lift cover up and off two upper tabs on electrical caddy and remove.
5. See Figure 7-2. Slide data link connector (2) [91] up to disengage from electrical caddy.

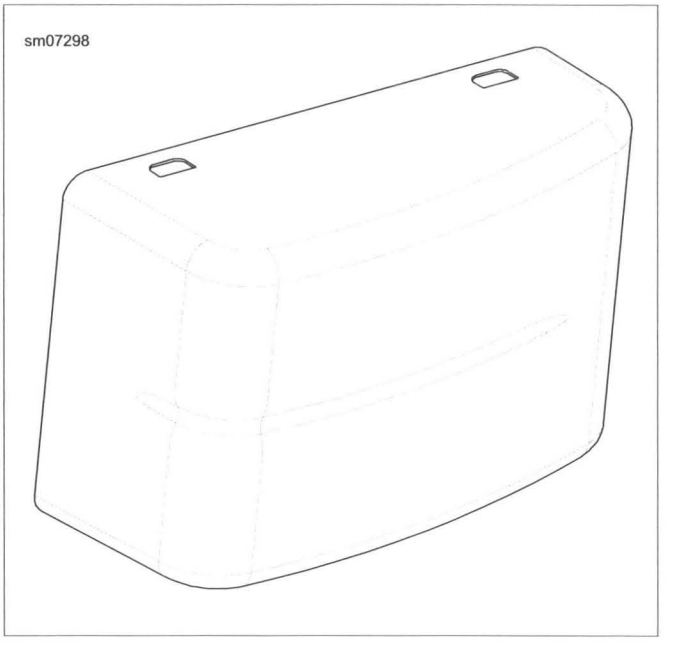

Figure 7-1. Electrical Caddy Cover

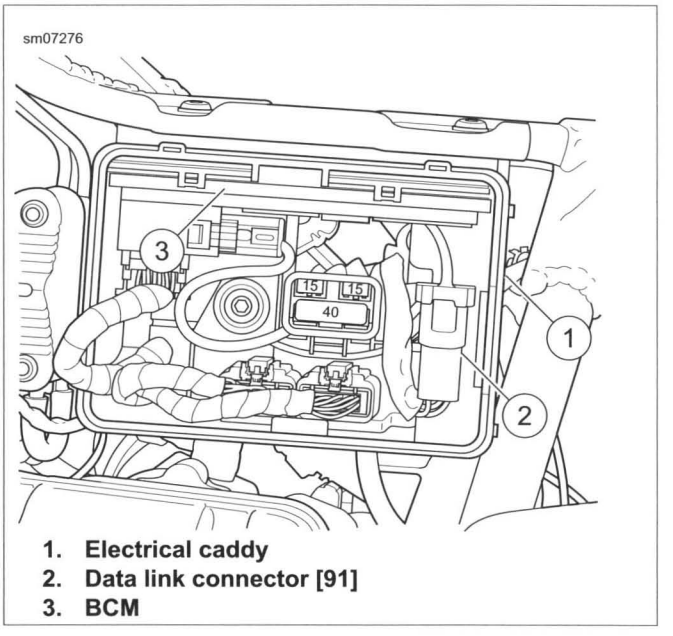

1. **Electrical caddy**
2. **Data link connector [91]**
3. **BCM**

Figure 7-2. Electrical Caddy

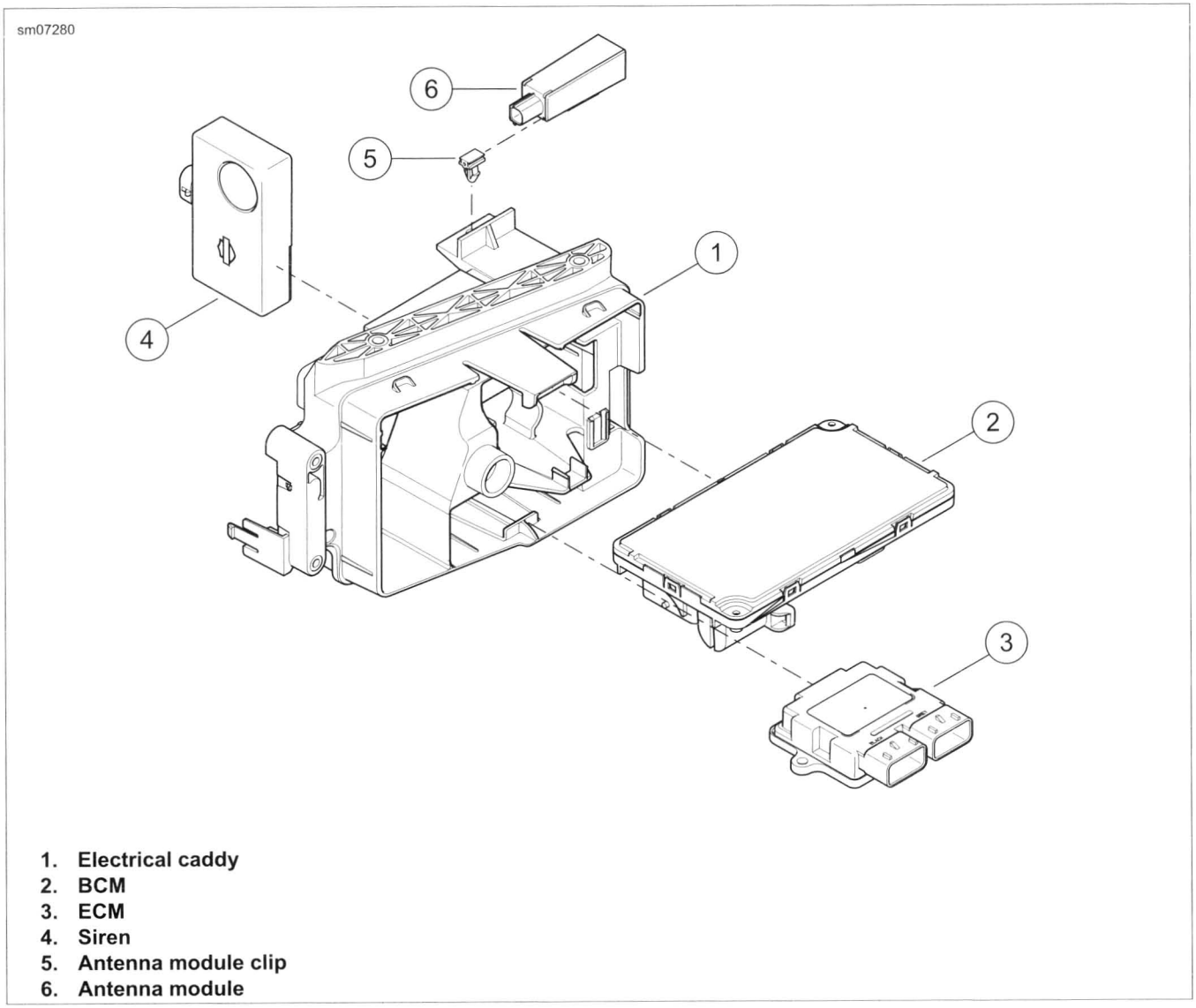

1. Electrical caddy
2. BCM
3. ECM
4. Siren
5. Antenna module clip
6. Antenna module

Figure 7-3. Electrical Caddy Components

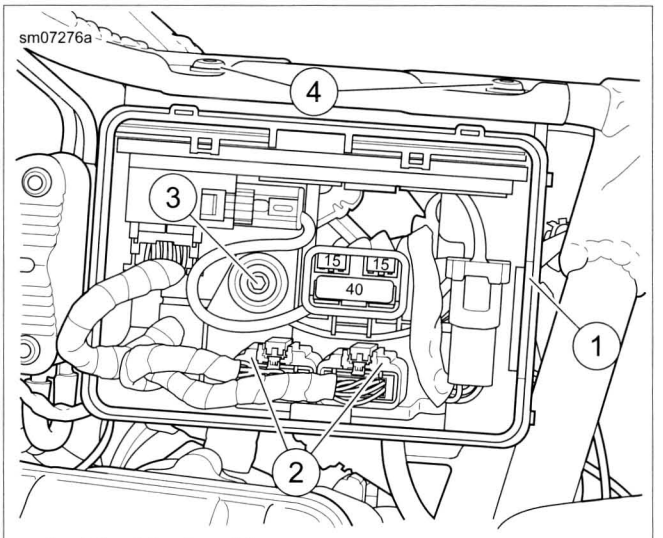

1. **Electrical caddy**
2. **ECM connectors [78]**
3. **Front electrical caddy fastener**
4. **Electrical caddy fasteners (2)**

Figure 7-4. Electrical Caddy Fasteners

NOTE

No modules are held in with fasteners.

6. See Figure 7-3. Disconnect ECM connectors [78-1], [78-2]. Remove the ECM (3).
7. Disconnect BCM connectors [259], [242]. Remove the BCM (2).
8. Disconnect antenna module (6) for security siren [209] and remove.
9. Disconnect ignition coil connector [83].
10. Disconnect spark plug cables from coil.
11. See Figure 7-4. Remove front electrical caddy fastener (3).
12. Remove top electrical caddy fasteners (4).
13. Pull the electrical caddy (1) away from vehicle. Remove wiring from back of electrical caddy.
14. With electrical caddy pulled away from the vehicle, disconnect security siren connector [142] and remove siren.
15. See Figure 7-4. Remove the electrical caddy.

INSTALLATION

FASTENER	TORQUE VALUE	
Electrical caddy fasteners, top	90-110 **in-lbs**	10.1-12.4 Nm
Electrical caddy fastener, front	40-60 **in-lbs**	4.5-6.8 Nm

NOTE

No fasteners are used to attach the BCM or ECM to the electrical caddy.

1. See Figure 7-3. Snap ECM into electrical caddy.
2. Route all wiring and fuse block through back of electrical caddy along with ECM and data link connectors before installing the electrical caddy.
3. Connect BCM connectors to BCM (2). Install BCM.
4. Connect siren connector. Insert siren (4) into back of electrical caddy. Unless equipped with security system, attach siren connector to back of electrical caddy.
5. See Figure 7-4. Install but do not tighten electrical caddy front fastener (3).
6. Install electrical caddy top fasteners (4). Tighten to 90-110 **in-lbs** (10.1-12.4 Nm).
7. Tighten electrical caddy front fastener to 40-60 **in-lbs** (4.5-6.8 Nm).
8. Connect electronic control module (ECM) connectors [78-1] [78-2].
9. See Figure 7-5. Install data link connector (2) to electrical caddy as shown.
10. Install main fuse.
11. Attach coil connector [83].
12. Attach spark plug cables. Install rear cable on upper coil tower.
13. Install electrical caddy cover.
14. Connect negative battery cable. Install battery cover.

⚠WARNING

After installing seat, pull upward on seat to be sure it is locked in position. While riding, a loose seat can shift causing loss of control, which could result in death or serious injury. (00070b)

15. Install seat.

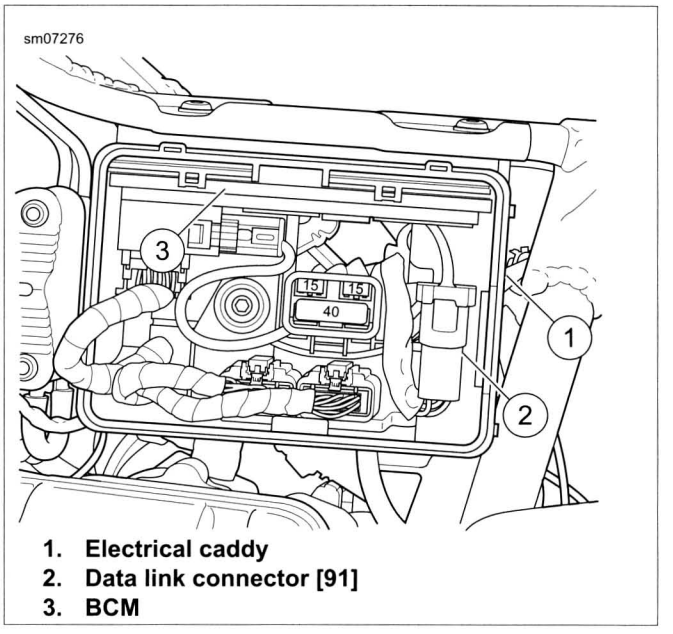

1. **Electrical caddy**
2. **Data link connector [91]**
3. **BCM**

Figure 7-5. Electrical Caddy

GENERAL

PART NUMBER	TOOL NAME
HD-48650	DIGITAL TECHNICIAN II

The ECM is mounted in the bottom of the electrical caddy.

See the electrical diagnostic manual for information on the function and testing of the ECM.

NOTES

- *The ECM cannot be repaired. Replace the unit if it fails.*
- *Always calibrate replaced ECMs with DIGITAL TECHNICIAN II (Part No. HD-48650).*

REPLACEMENT

Removal

⚠WARNING

To prevent accidental vehicle start-up, which could cause death or serious injury, remove main fuse before proceeding. (00251b)

1. Remove electrical caddy cover.
2. Remove main fuse.
3. See Figure 7-3. Remove ECM (3) from mounting bracket.
   a. A lip on the electrical caddy holds the ECM in place. Press latches on connectors [78-1] ECM (BK), [78-2] ECM (GY) and disconnect from ECM.
   b. Lift the ECM and slide it out of the electrical caddy after it has been disconnected.

Installation

1. See Figure 7-3. Install ECM (3) into bottom of electrical caddy and snap in place to secure.
2. Plug connectors [78-1] 18-place Tyco (BK), [78-2] 18-place Tyco (GY) into ECM.
3. Install main fuse.
4. Install electrical caddy cover.

GENERAL

See Figure 7-6. The BCM (2) is on the left side of the vehicle in the top of the electrical caddy. The BCM supplies ignition and accessory power to the vehicle. The fuses are the main fuse (40 amp), the battery fuse (15 amp) and the accessories fuse (15 amp). For diagnostic information see the electrical diagnostic manual.

REMOVAL

1. Remove electrical caddy cover.

⚠WARNING

To prevent accidental vehicle start-up, which could cause death or serious injury, remove main fuse before proceeding. (00251b)

2. Remove main fuse. See 7.8 FUSES.
3. See Figure 7-6. Slide BCM (2) out of electrical caddy (1).
4. Disconnect electrical connectors [259] BCM battery power (Bk), [242] BCM (Bk) on the body control module (BCM).

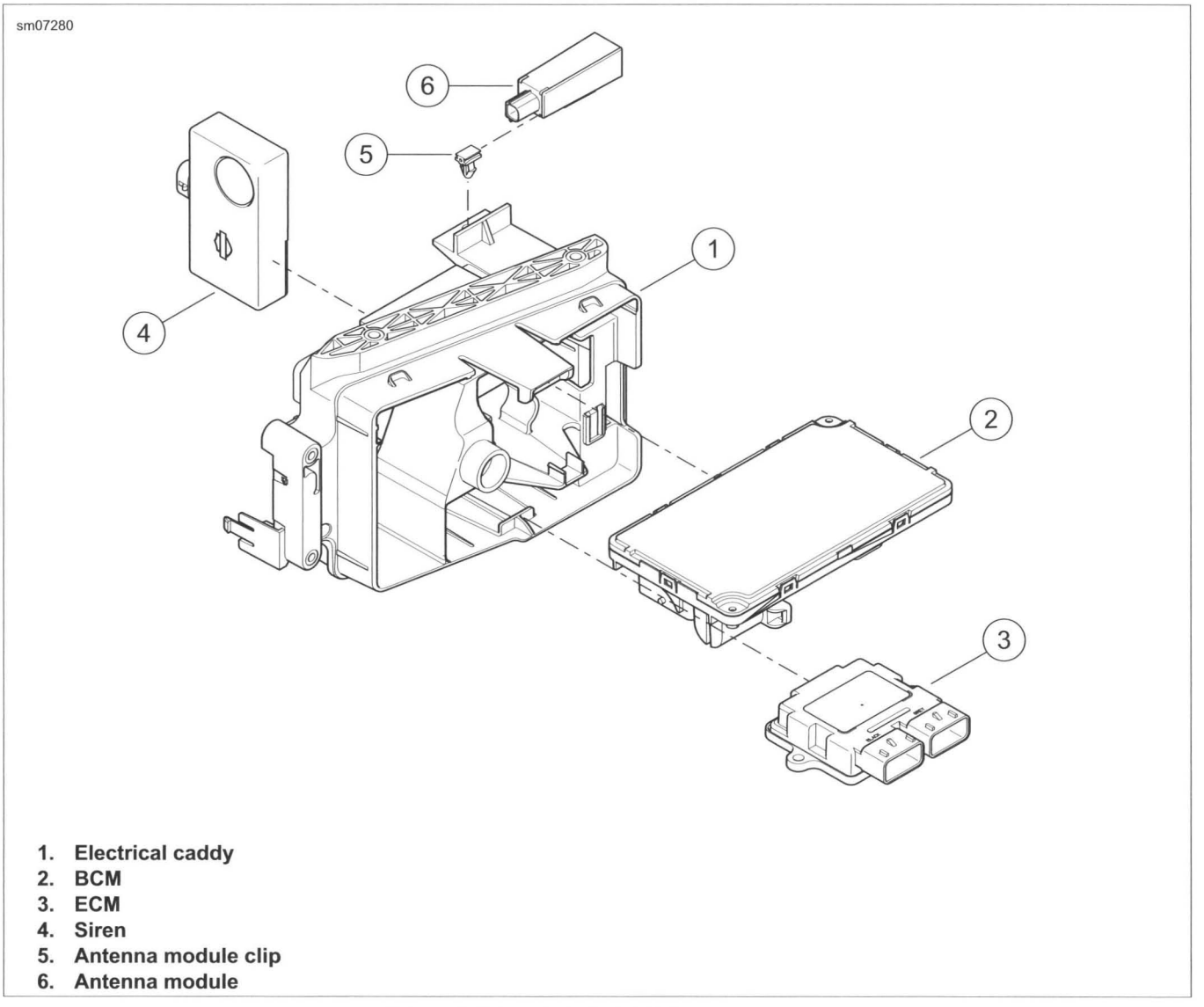

1. **Electrical caddy**
2. **BCM**
3. **ECM**
4. **Siren**
5. **Antenna module clip**
6. **Antenna module**

Figure 7-6. Electrical Caddy Components

INSTALLATION

PART NUMBER	TOOL NAME
HD-48650	DIGITAL TECHNICIAN II

NOTES

- *All replacement BCMs are configured for keyless ignition. If the RUN/STOP switch is in the RUN position when the BCM is replaced and the battery is reconnected, the vehicle enables all ignition functions and does not respond to the ignition switch. If this situation occurs, turn the ignition and RUN/STOP switches OFF, then turn the ignition ON.*
- *If ignition is cycled ON when BCM is not secured in electrical caddy, the lights may cycle ON for 2 seconds and the word "tip" is displayed on the odometer.*

1. Verify that ignition and RUN/STOP switches are in the OFF position.
2. See Figure 7-6. Connect both BCM connectors [259], [242]. Install BCM (2) into electrical caddy.
3. Install main fuse.
4. Turn ignition switch to ON to configure BCM for keyed ignition operation.

NOTE

Use DIGITAL TECHNICIAN II (Part No. HD-48650) for configuration and password learning after replacing BCM.

5. Configure BCM.

⚠WARNING

Be sure that all lights and switches operate properly before operating motorcycle. Low visibility of rider can result in death or serious injury. (00316a)

6. Turn ignition on. Check operation of all lamps.

REMOVAL

NOTE

For information on the anti-theft module and antenna for vehicles sold in the Brazilian market, see the electrical diagnostic manual.

1. Disarm security system if equipped.
2. Remove electrical caddy. See 7.3 ELECTRICAL CADDY.
3. See Figure 7-7. Remove security siren (2) from electrical caddy.

INSTALLATION

1. See Figure 7-7. Install security siren (2) into back of electrical caddy.
2. Install electrical caddy. See 7.3 ELECTRICAL CADDY.
3. Test security system.

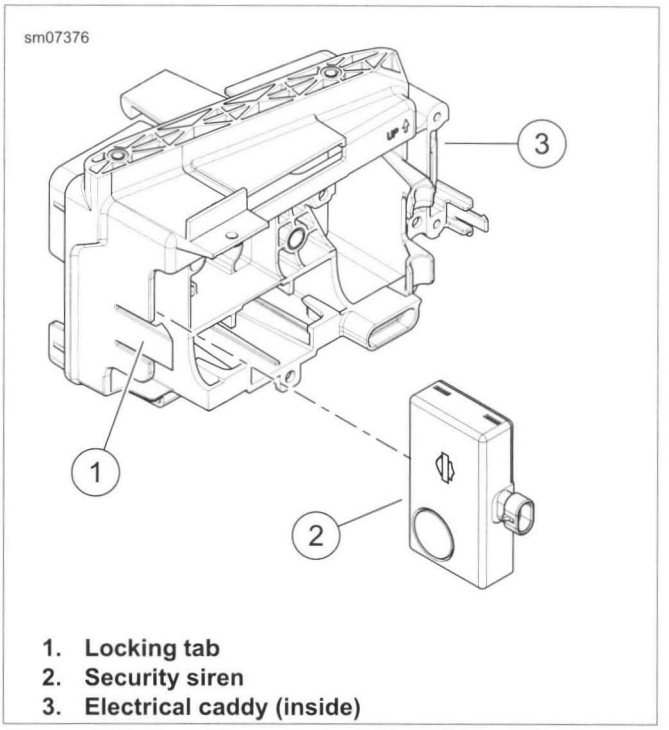

1. Locking tab
2. Security siren
3. Electrical caddy (inside)

Figure 7-7. Security Siren

INSPECT SPARK PLUG CABLES

1. Inspect spark plug cables. Replace if necessary.
   a. Check for cracks or loose terminals.
   b. Check for loose fit on ignition coil and spark plugs.
2. Check cable boots and caps for cracks or tears. Replace cable if boots or caps are worn or damaged.
3. See Figure 7-8. Check spark plug cable resistance with an ohmmeter. Replace cables not meeting resistance specifications. Refer to Table 7-5.

Table 7-5. Spark Plug Cable Resistance Values: Dyna

DESCRIPTION	LENGTH		RESISTANCE VALUE (OHMS)
	In	mm	
Front cable	19.00	483	4720-12,920
Rear cable	7.25	184	1813-5000

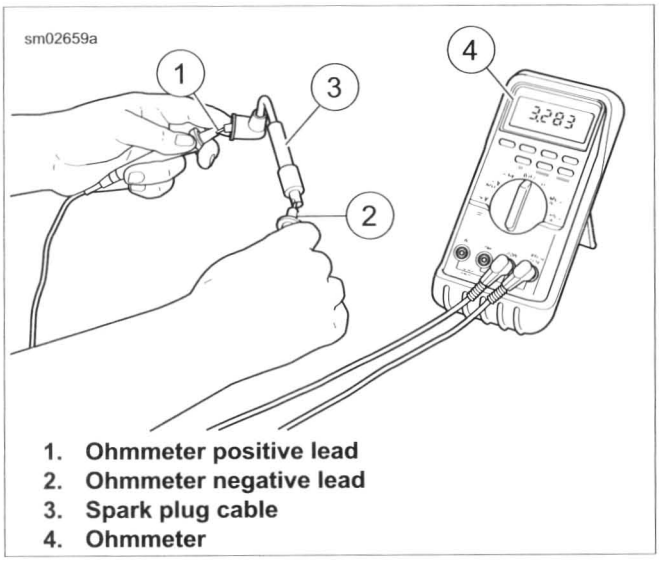

1. **Ohmmeter positive lead**
2. **Ohmmeter negative lead**
3. **Spark plug cable**
4. **Ohmmeter**

Figure 7-8. Testing Resistance

REMOVAL

⚠WARNING

Disconnecting spark plug cable with engine running can result in electric shock and death or serious injury. (00464b)

NOTE

When disconnecting spark plug cable, grasp and pull on the rubber boot at the end of the cable assembly. Do not pull on the cable portion itself. Pulling on the cable damages the carbon core of the cable.

1. Disconnect spark plug cables from ignition coil and spark plug terminals. Inspect all removed cables for damage.
2. See Figure 7-9. Remove horn bracket clips (1) on horn bracket for front spark plug cable.

INSTALLATION

1. See Figure 7-9. Connect spark plug cables to ignition coil and spark plugs. Rear cylinder plug cable attaches to top coil terminal (4). Fasten boots/caps securely. Tight connections provide the necessary moisture-proof environment for the ignition coil and spark plug terminals.
2. Secure front spark plug cable to horn bracket with horn bracket clips (1).
3. Install cable retention clip (2) over spark plug cables. Make sure that clip is 1.5-2.0 in (38.1-50.8 mm) from spark plug boots (3).

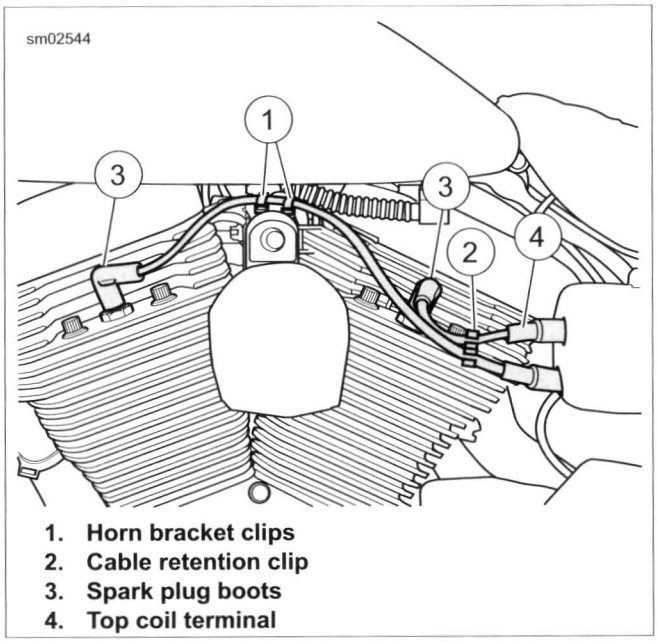

1. **Horn bracket clips**
2. **Cable retention clip**
3. **Spark plug boots**
4. **Top coil terminal**

Figure 7-9. Spark Plug Cable Routing

GENERAL

See Figure 7-11. The fuse block is under the electrical caddy cover. The block contains a 40 ampere main fuse and two 15 ampere fuses.

REPLACEMENT

1. Disarm security system.
2. Turn ignition switch OFF.
3. See Figure 7-10. Remove the electrical caddy cover.
4. See Figure 7-11. Remove main fuse.
5. Remove suspect fuse.
6. Plug in **new** fuse.
7. Install main fuse.
8. Install the electrical caddy cover.

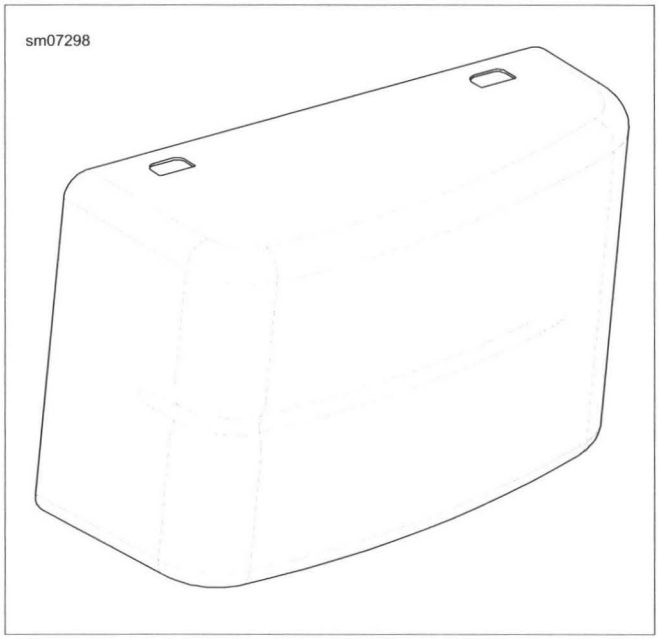

Figure 7-10. Electrical Caddy Cover

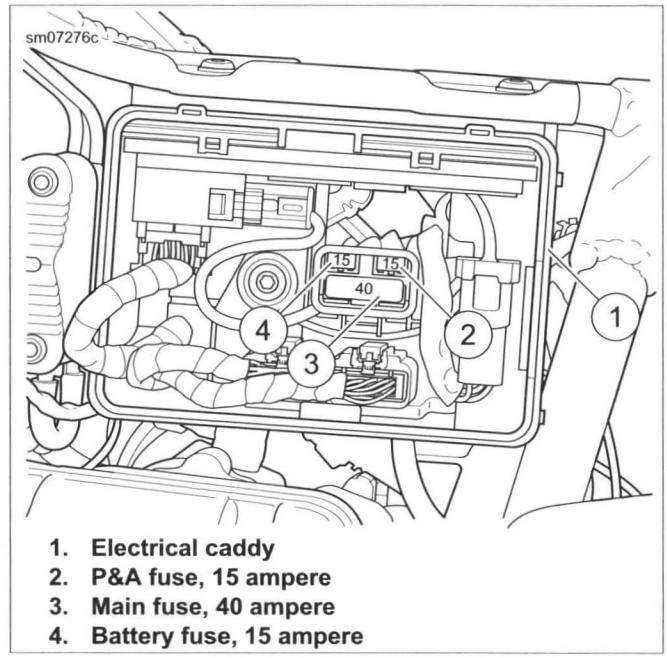

1. **Electrical caddy**
2. **P&A fuse, 15 ampere**
3. **Main fuse, 40 ampere**
4. **Battery fuse, 15 ampere**

Figure 7-11. Fuses/Electrical Caddy

REMOVAL

PART NUMBER	TOOL NAME
HD-50988	IGNITION SWITCH SPANNER WRENCH

All but FXDL

⚠WARNING

The automatic-on headlamp feature provides increased visibility of the rider to other motorists. Be sure headlamp is on at all times. Poor visibility of rider to other motorists can result in death or serious injury. (00030b)

NOTES

- *Dyna model ignition/light/key switches cannot be repaired. Replace assembly upon failure.*
- *The ignition switch is on the fuel tank instrument panel.*
- *Switch is locked or unlocked by lifting switch cover, inserting key and turning key counterclockwise to lock or clockwise to unlock.*
- *Key may be removed in any position.*

1. Remove seat.

⚠WARNING

To prevent accidental vehicle start-up, which could cause death or serious injury, disconnect negative (-) battery cable before proceeding. (00048a)

2. Disconnect negative battery cable.
3. See Figure 7-12. Remove fasteners (1) from console (2, 5 or 6).
4. Remove console.
5. Disconnect switch connector.
6. Remove mounting screws (4).

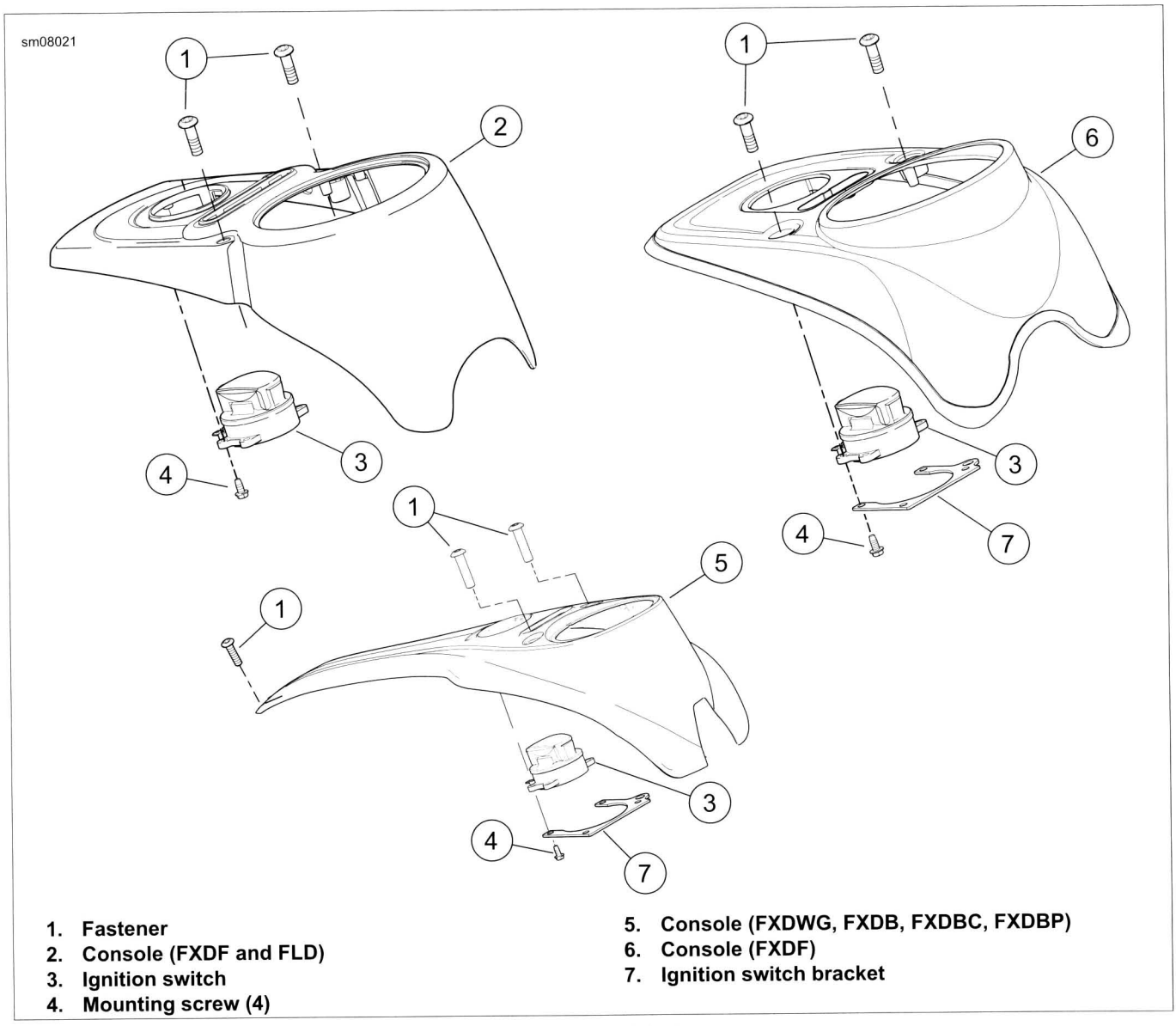

1. **Fastener**
2. **Console (FXDF and FLD)**
3. **Ignition switch**
4. **Mounting screw (4)**
5. **Console (FXDWG, FXDB, FXDBC, FXDBP)**
6. **Console (FXDF)**
7. **Ignition switch bracket**

Figure 7-12. Ignition Switch: All but FXDL

FXDL

NOTE

The ignition switch is on the left side of the vehicle between the engine cylinders.

1. See Figure 7-13. Remove set screw (5) securing knob (4) to ignition switch (1).
2. Remove nut (3) using IGNITION SWITCH SPANNER WRENCH (Part No. HD-50988).
3. Remove cover (6) from engine mounting bracket (2).
4. Disconnect wiring harness from ignition switch.
5. Remove ignition switch (1).

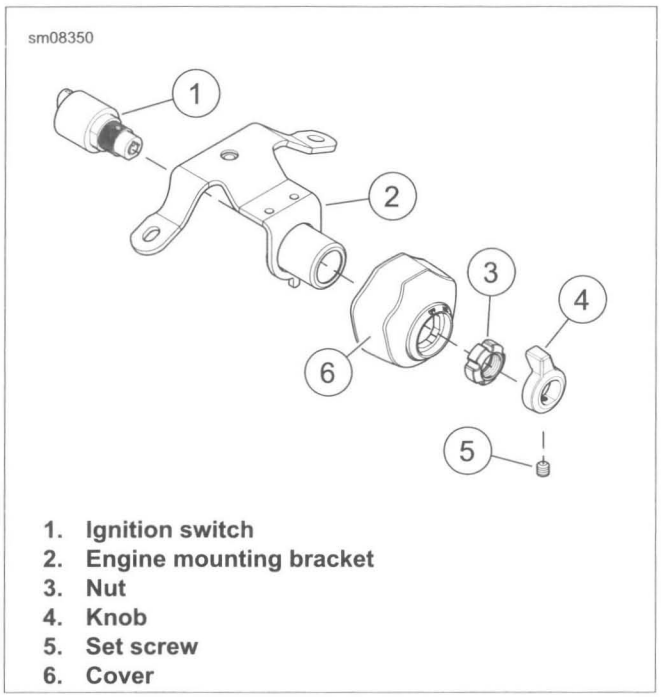

1. **Ignition switch**
2. **Engine mounting bracket**
3. **Nut**
4. **Knob**
5. **Set screw**
6. **Cover**

Figure 7-13. Ignition Switch: FXDL

INSTALLATION

PART NUMBER	TOOL NAME
HD-50988	IGNITION SWITCH SPANNER WRENCH

FASTENER	TORQUE VALUE	
Ignition switch screws	20-30 **in-lbs**	2.3-3.4 Nm
Console mounting screws	41-49 **in-lbs**	4.6-5.5 Nm
Ignition switch nut	140-160 **in-lbs**	15.8-18.1 Nm
Ignition switch set screw	20-26 **in-lbs**	2.3-2.9 Nm

All but FXDL

1. See Figure 7-12. Replace ignition switch (3). Install screws (4). Tighten to 20-30 **in-lbs** (2.3-3.4 Nm).
2. Reconnect switch wire connectors in their original positions.
3. Install console (2, 5, 6) with fasteners (1). Tighten to 41-49 **in-lbs** (4.6-5.5 Nm).
4. Connect negative battery cable.

⚠WARNING

After installing seat, pull upward on seat to be sure it is locked in position. While riding, a loose seat can shift causing loss of control, which could result in death or serious injury. (00070b)

5. Install seat.
6. Test vehicle operation. Refer to Table 7-6.

Table 7-6. Ignition Switch Positions

SWITCH POSITION	FUNCTION
OFF	Ignition, lamps and accessories are off.
ACC*	Accessories are on. Hazard warning flashers can be operated. Instrument lamps are on. The headlamp switch can be switched between HI and LO. Brake lamp and horn can be activated.
IGNITION*	Ignition, lamps and accessories are on.

*International models have an additional function - position lamp and tail lamp are also on.
NOTE: Leaving the motorcycle in ACC for an extended amount of time can discharge the battery. If in ACC, the motorcycle will be automatically turned OFF after two hours to prevent battery from complete discharge. To resume normal operation turn the ignition switch back to OFF and then to the desired position.

FXDL

1. See Figure 7-13. Install ignition switch (1) into engine mounting bracket (2).
2. Install ignition switch wiring.
3. Install cover (6) over ignition switch.
4. Install nut (3) using IGNITION SWITCH SPANNER WRENCH (Part No. HD-50988). Tighten to 140-160 **in-lbs** (15.8-18.1 Nm).
5. Install knob (4) on ignition switch. Tighten set screw to 20-26 **in-lbs** (2.3-2.9 Nm).
6. Test vehicle operation. Refer to Table 7-6.

BATTERY TRAY

FASTENER	TORQUE VALUE	
Battery tray screws	96-120 **in-lbs**	10.8-13.6 Nm

NOTES

- *Record routing and retention points before removing battery cables.*
- ***ABS models:** The ABS module is located below the battery tray. Install tray by tipping top of tray inward first, then swinging bottom of tray inward.*

Removal

1. **ABS models:** Remove ABS module cover.
2. Remove battery. See 1.18 BATTERY MAINTENANCE, Disconnection and Removal.
3. See Figure 7-14. Remove two screws and washers (1).
4. Remove screw and washer (2).
5. Guide battery cables out through holes in rear of battery tray (3). Remove tray.

Installation

NOTES

ABS models:

- *Check that rear wheel speed sensor wires are routed so they are not pinched during installation.*
- *Check that rear brake line is routed so it is not pinched during installation.*

1. Guide battery cables through holes in rear of battery tray (3) and place tray in position.
2. See Figure 7-15. Place battery cables in recesses at upper corners of battery tray.
3. See Figure 7-14. Install screws and washers (1, 2). Tighten to 96-120 **in-lbs** (10.8-13.6 Nm).
4. **ABS models:** Install ABS module cover.

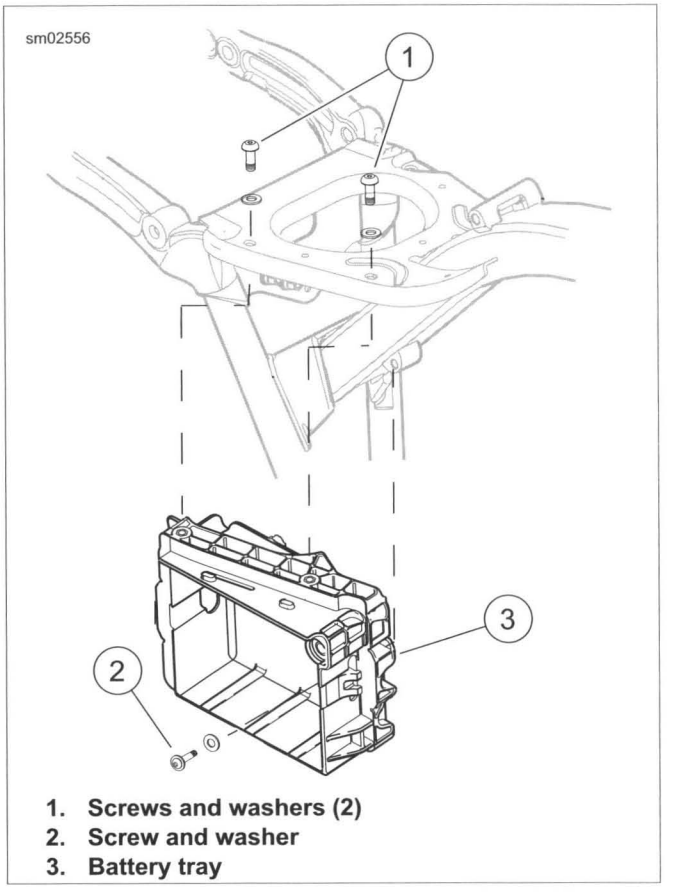

1. **Screws and washers (2)**
2. **Screw and washer**
3. **Battery tray**

Figure 7-14. Battery Tray

BATTERY CABLES

FASTENER	TORQUE VALUE	
Starter positive terminal nut	60-80 **in-lbs**	6.8-9.0 Nm
Transmission ground stud nut	96-144 **in-lbs**	10.8-16.3 Nm

Routing

1. See Figure 7-15. Route positive cable from battery positive terminal through upper front hole in battery tray. Continue to route positive battery cable to starter post on right side of chassis.

⚠WARNING

Be sure rubber boot covers starter solenoid terminal connected to positive (+) battery cable. An uncovered terminal can short and cause sparks, which could result in a battery explosion and death or serious injury. (00463c)

⚠WARNING

Connect positive (+) battery cable first. If positive (+) cable should contact ground with negative (-) cable connected, the resulting sparks can cause a battery explosion, which could result in death or serious injury. (00068a)

NOTICE

Connect the cables to the correct battery terminals. Failure to do so could result in damage to the motorcycle electrical system. (00215a)

NOTICE

Do not over-tighten bolts on battery terminals. Use recommended torque values. Over-tightening battery terminal bolts could result in damage to battery terminals. (00216a)

2. See Figure 7-16 and Figure 7-17. Install positive battery cable to starter post with nut. Orient terminal so cable faces away (towards left side of motorcycle).
   a. Tighten nut to 60-80 **in-lbs** (6.8-9.0 Nm).
   b. Cover nut with protective rubber boot.
3. See Figure 7-17 and Figure 7-19. Route negative battery cable toward left side of motorcycle and then down to transmission ground stud.

NOTE

With ground stud nut loosely installed, pull gently on battery ground cable to position it correctly.

4. With negative battery cable installed on transmission ground stud, tighten to 96-144 **in-lbs** (10.8-16.3 Nm).
5. See Figure 7-16 and Figure 7-17. Route harness under starter and attach with positive cable.
6. See Figure 7-18. Install battery. Verify that all battery cables are routed correctly.
7. Attach positive cable to battery.
8. Attach negative cable.
9. Secure battery with battery strap. Install battery cover.
10. **ABS models:** Install module cover.

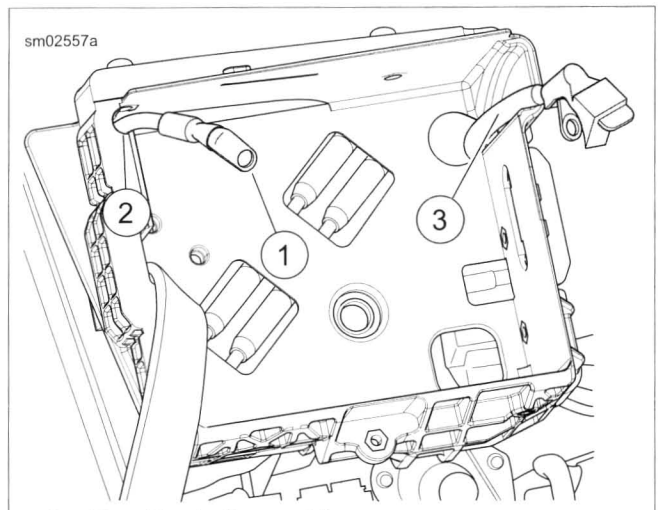

1. **Negative battery cable**
2. **Groove**
3. **Positive battery cable**

Figure 7-15. Battery Cables

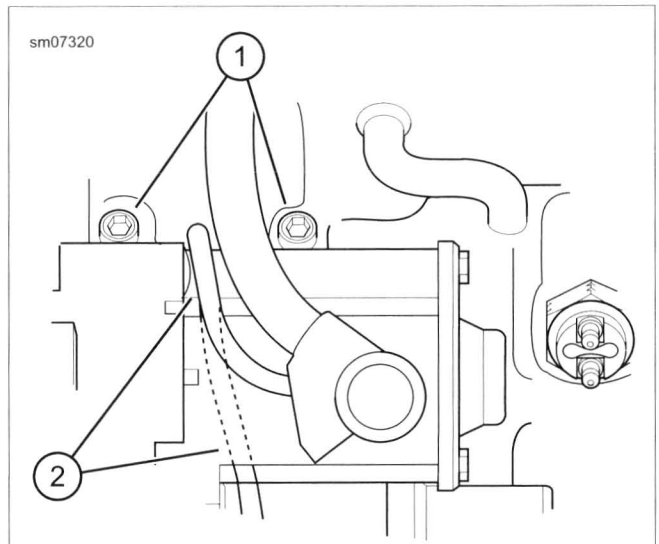

1. **Transmission cover screws (2)**
2. **Ring terminal harness (routed under starter)**

Figure 7-16. Starter Cable Connections

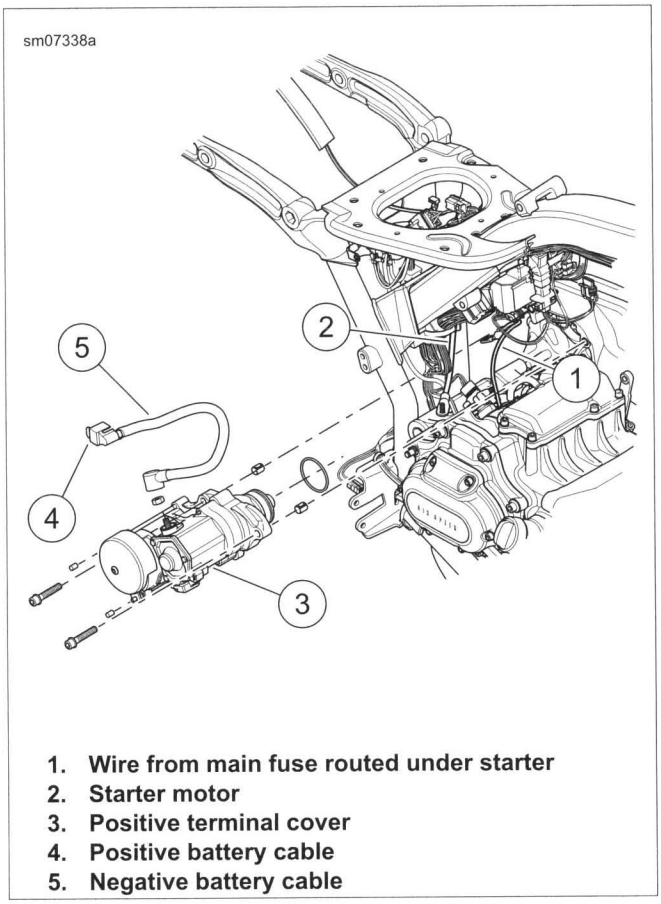

1. Wire from main fuse routed under starter
2. Starter motor
3. Positive terminal cover
4. Positive battery cable
5. Negative battery cable

Figure 7-17. Battery Cables and Starter Motor

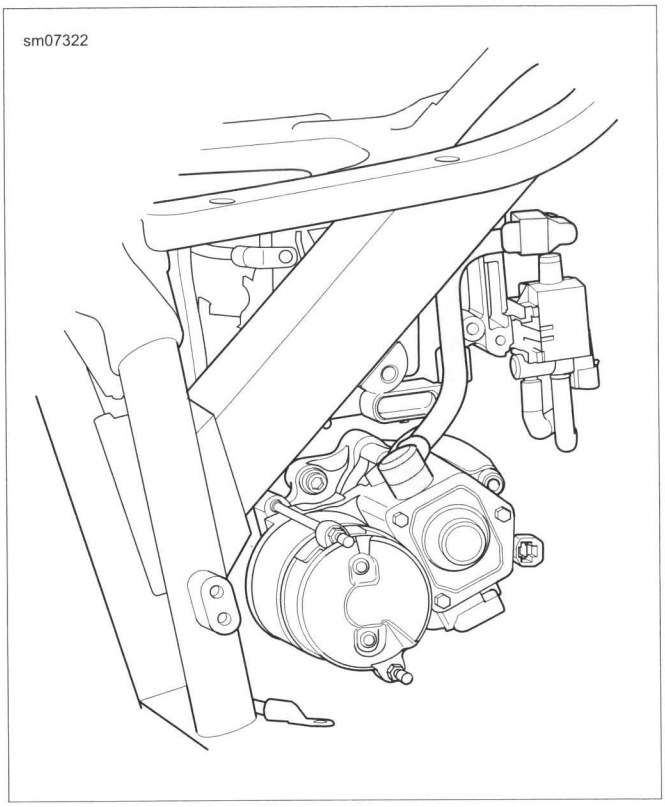

Figure 7-18. Starter Cable Correct Routing From Starter to Battery Area

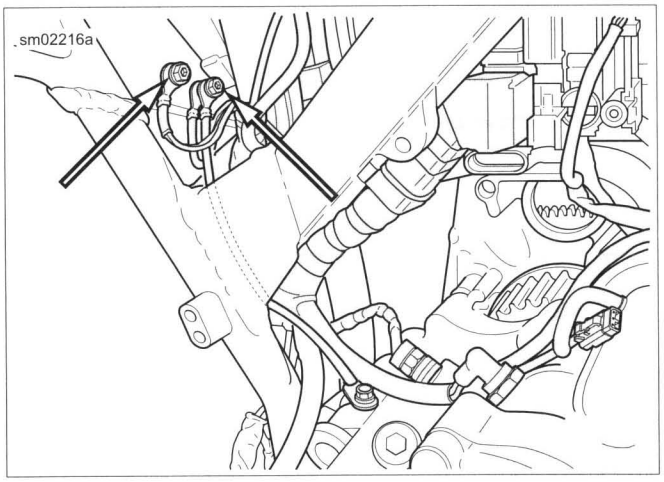

Figure 7-19. Vehicle Ground Studs and Routing

GENERAL

The starter assembly includes a field coil, solenoid and drive assembly.

NOTES

- *For troubleshooting and diagnostic information see the electrical diagnostic manual.*
- *Use touch-up paint as necessary prior to installation. Paint flaking does not require starter replacement.*

REMOVAL

⚠WARNING

To prevent accidental vehicle start-up, which could cause death or serious injury, disconnect negative (-) battery cable before proceeding. (00048a)

1. **ABS models:** Remove module cover.
2. Remove battery and battery tray. See 7.10 BATTERY TRAY AND BATTERY CABLES.
3. **ABS models:** Loosen, but do not remove, the fasteners securing the ABS module to the frame.
4. See Figure 7-20. Remove starter cover fastener (1) and starter cover (2) from starter, if applicable.
5. Disconnect starter wiring:
   a. Remove protective boot (4).
   b. Remove nut with washer (metric).
   c. Remove positive battery cable ring terminal.
   d. Disconnect solenoid wire (5).
6. Remove both starter mounting fasteners (3).
7. Remove starter from right side.
8. Discard starter housing O-ring.

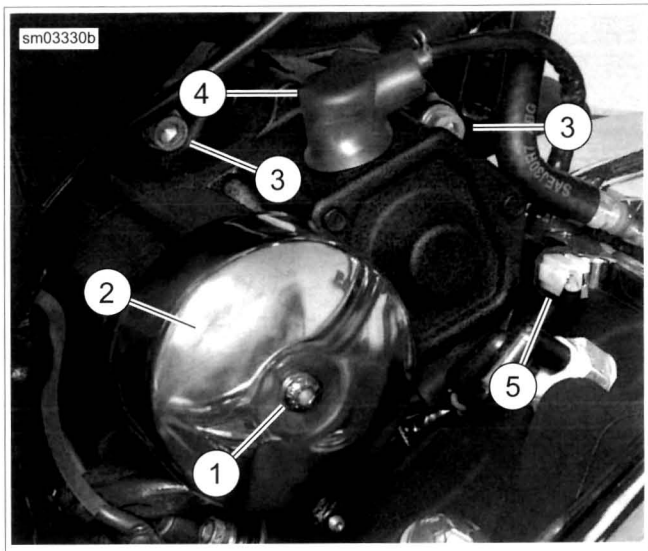

1. **Starter cover fastener***
2. **Starter cover***
3. **Starter mounting fasteners**
4. **Protective boot**
5. **Solenoid wire**

Figure 7-20. Starter (Items marked with an asterisk, not used on all models)

DRIVE ASSEMBLY

FASTENER	TORQUE VALUE	
Starter through bolts	39-65 **in-lbs**	4.4-7.3 Nm
Solenoid terminal post nut	70-90 **in-lbs**	7.9-10.2 Nm
Starter end cover screw	90-110 **in-lbs**	10.2-12.4 Nm

Disassembly

1. Remove end cover, if equipped.
2. Remove two nuts to release end cover bracket from through bolts, if equipped.
3. See Figure 7-21. Pull up rubber boot (1). Remove hex nut with captive lockwasher. Release field wire from terminal post on solenoid housing.
4. Loosen field coil housing through bolts (2) to release field coil housing from solenoid housing.

NOTE

Do not remove armature and brush plate from housing. No replacement parts are available.

5. Remove armature housing (3) keeping all contents together for reassembly.
6. Remove two screws to release drive housing from solenoid housing. Use a rubber mallet to separate drive and solenoid housings, if necessary.
7. Remove idler gear (5) from bearing cage in drive housing. Remove bearing cage with five roller bearings (6) from shaft in drive housing.

8. Push on end of drive shaft to remove clutch starter sub assembly (7) from drive housing.
9. Remove solenoid spring and ball from the output shaft of the clutch starter sub assembly.

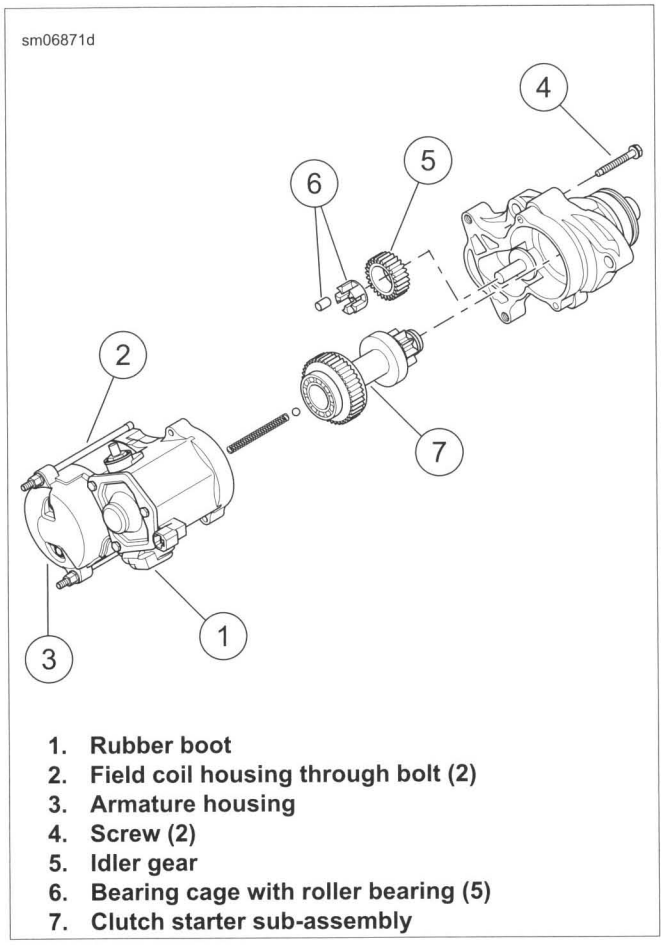

1. **Rubber boot**
2. **Field coil housing through bolt (2)**
3. **Armature housing**
4. **Screw (2)**
5. **Idler gear**
6. **Bearing cage with roller bearing (5)**
7. **Clutch starter sub-assembly**

Figure 7-21. Clutch Starter Sub-assembly and Housing

Inspection

1. Inspect two O-rings on drive housing for damage. Replace if necessary.
2. See Figure 7-21. Verify that the idler gear (5) rotates freely without drag or sticking.
3. Remove and inspect idler gear. Replace starter motor if the gear is damaged.
4. Inspect roller bearings (6). Bearings must rotate freely without drag or sticking. Replace starter motor if the bearings are pitted or grooved.
5. Inspect the steel ball for damage. Replace if necessary.

NOTE

Replace entire starter motor if solenoid return spring fails.

Assembly

1. See Figure 7-21. Assemble starter.
   a. Lubricate parts with high temperature grease such as LUBRIPLATE 110 during assembly.
   b. Install bearing cage with five roller bearings (6) onto shaft in drive housing.
   c. Confirm that all five roller bearings are installed in grooves of bearing cage. Install idler gear (5) over bearing cage.
2. Lubricate bearings with LUBRIPLATE 110 before installation. Install **new** clutch starter sub-assembly (7) in drive housing seating the larger bearing in the counterbore.
3. Apply a light film of LUBRIPLATE 110 to solenoid plunger shaft. Install return spring on solenoid plunger shaft.
4. Apply a thin layer of HARLEY-DAVIDSON HIGH PERFORMANCE SEALANT - GRAY to the mating surface of the drive housing.
5. Mate the solenoid and drive housings with two screws. Alternately tighten until snug.
6. Install through bolts to fasten field coil to solenoid housing. Tighten to 39-65 **in-lbs** (4.4-7.3 Nm).
7. Secure field wire ring terminal to short post on solenoid housing with hex nut with captive lockwasher. Tighten to 70-90 **in-lbs** (7.9-10.2 Nm). Cover field wire ring terminal with rubber boot (1).
8. Install end cover bracket onto through bolts, if equipped. Align longest end of bracket on the field wire side. Install two nuts. Tighten until snug.
9. Install end cover, if equipped. Tighten to 90-110 **in-lbs** (10.2-12.4 Nm).

SOLENOID

FASTENER	TORQUE VALUE	
Solenoid contact post jamnut	65-80 **in-lbs**	7.3-9.0 Nm
Starter ring terminal hex nut	60-80 **in-lbs**	6.8-9.0 Nm

Remove Cover and Plunger

1. See Figure 7-22. Remove fasteners (1), cover (2) and gasket (3).
2. Remove the plunger (4) with spring (5).

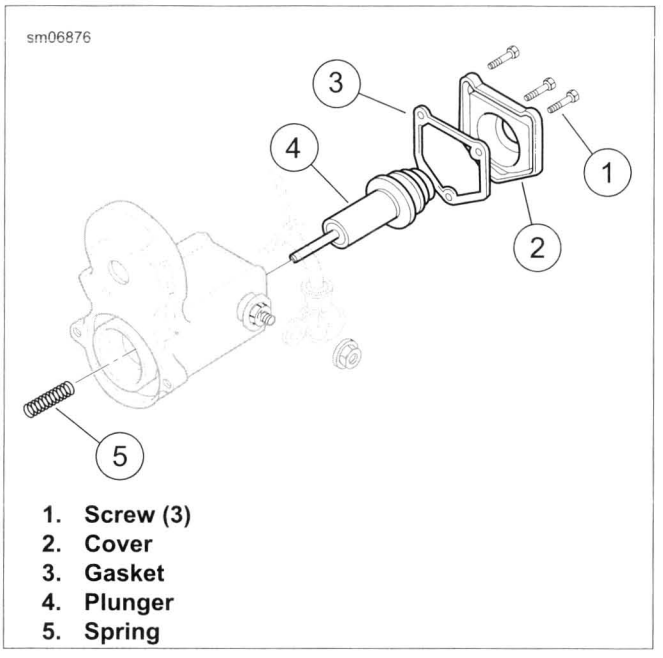

1. **Screw (3)**
2. **Cover**
3. **Gasket**
4. **Plunger**
5. **Spring**

Figure 7-22. Solenoid Plunger

Short Post Contact: Starter

1. Disassemble the short post contact:
   a. Remove the hex nut and the ring terminal from the post.
   b. See Figure 7-23. Remove jamnut (8), wave washer (7), O-ring (6) and round bushing (5).
   c. Remove the post bolt (1).
   d. Remove the hold-in terminal (2) from the post bolt.
   e. Remove the contact plate (3) and the square bushing (4).
2. Assemble the short post contact:
   a. Insert the square bushing into the housing.
   b. Install the contact plate with the 90 degree part of the contact plate against the solenoid winding.
   c. Install the post bolt through the hold-in terminal, the contact plate and the square bushing.
   d. Install the round bushing, O-ring, wave washer and jamnut.

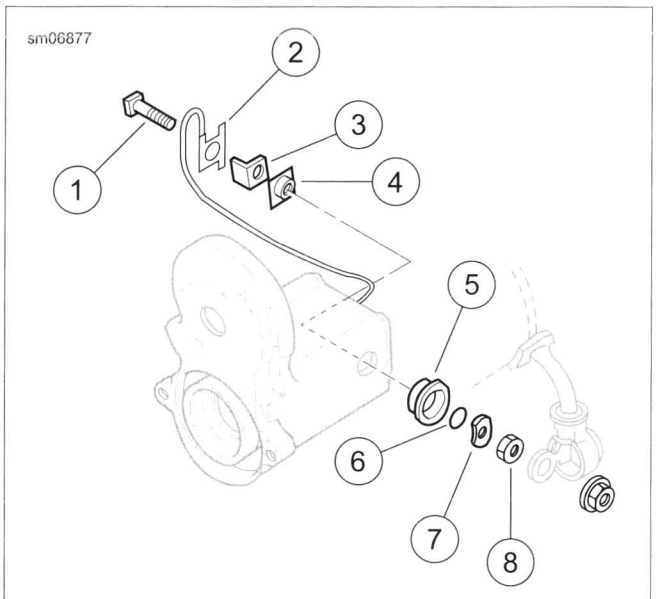

1. **Post bolt**
2. **Hold-in terminal**
3. **Contact plate**
4. **Square bushing**
5. **Round bushing**
6. **O-ring**
7. **Wave washer**
8. **Jamnut**

Figure 7-23. Short Post Contact (starter)

Long Post Contact: Battery Positive

1. See Figure 7-24. Remove the long post contact:
   a. Remove hex nut (9).
   b. Remove jamnut (8), wave washer (7), O-ring (6) and the round bushing (5).
   c. Remove post bolt (4), contact plate (3), square bushing (2) and paper insulator (1).
2. Install the long post contact:
   a. Insert the square bushing through the paper insulator into the housing.
   b. Install the contact plate with the foot against the solenoid winding.
   c. Install the post bolt.

   NOTE

   Check that the index pin on the round bushing fits the blind hole in the housing.

   d. Install the round bushing, O-ring, wave washer and jamnut.

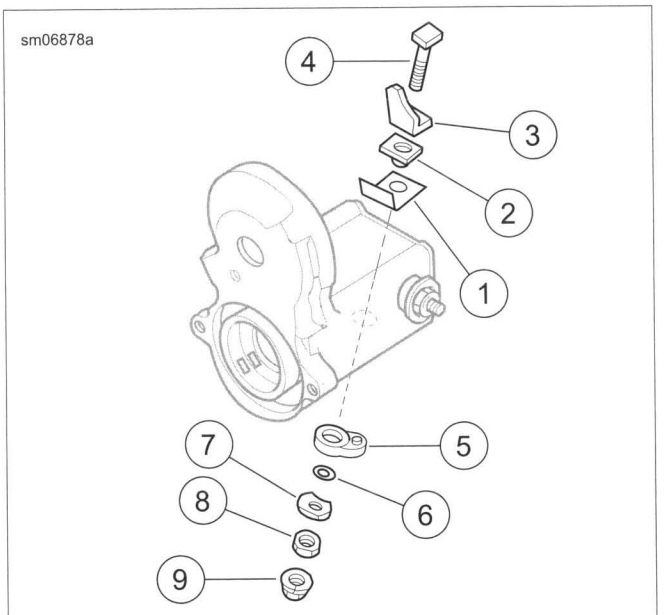

1. **Paper insulator**
2. **Square bushing**
3. **Contact plate**
4. **Post bolt**
5. **Round bushing**
6. **O-ring**
7. **Wave washer**
8. **Jamnut**
9. **Hex nut**

Figure 7-24. Long Post Contact (battery)

Install Plunger and Cover

1. Apply LUBRIPLATE 110 to the plunger shaft. Install the spring.
2. Install the plunger and spring in the housing.
3. While compressing the plunger, alternately tighten the contact post jamnuts to 65-80 **in-lbs** (7.3-9.0 Nm).
4. Check that the contact plates are aligned to the solenoid winding.
5. Install the cover:
   a. Install a **new** gasket on the cover.
   b. Install the cover.
   c. Install the fasteners until snug.
6. Install the starter positive ring terminal.
7. Install the hex nut. Tighten to 60-80 **in-lbs** (6.8-9.0 Nm).

INSTALLATION

FASTENER	TORQUE VALUE	
Starter mounting fasteners	25-27 ft-lbs	33.9-36.6 Nm
Starter positive terminal nut	60-80 **in-lbs**	6.8-9.0 Nm
ABS module bracket	90-114 **in-lbs**	10.2-12.8 Nm

1. Examine two split ring dowel bushings in inner primary housing where starter motor assembly mounts. If dowel bushings are loose, remove bushings and pry open slightly to provide an interference fit in primary housing. Install bushings into primary housing.
2. Install **new** starter housing O-ring.
3. Install starter from right side.
4. See Figure 7-20. Apply a drop of LOCTITE 243 MEDIUM STRENGTH THREADLOCKER AND SEALANT (blue) to threads of starter mounting fasteners (3).
5. Install the two starter mounting fasteners (3) and washers. Tighten to 25-27 ft-lbs (33.9-36.6 Nm).

⚠WARNING

Be sure rubber boot covers starter solenoid terminal connected to positive (+) battery cable. An uncovered terminal can short and cause sparks, which could result in a battery explosion and death or serious injury. (00463c)

6. See Figure 7-20. Attach positive battery cable, and solenoid wire (5). Tighten nut (metric) to 60-80 **in-lbs** (6.8-9.0 Nm). Place protective boot (4) securely over terminal.
7. Attach starter cover (2) using fastener (1) if present of this model.
8. Install battery tray and battery. See 7.10 BATTERY TRAY AND BATTERY CABLES and 1.18 BATTERY MAINTENANCE.
9. **ABS models:** Install module.
   a. Tighten mounting fasteners securing ABS module bracket to frame.
   b. Tighten to 90-114 **in-lbs** (10.2-12.8 Nm).
   c. Attach ABS module cover.

GENERAL

NOTICE

When replacement is required, use only the specified sealed beam unit or bulb, available from a Harley-Davidson dealer. An improper wattage sealed beam or bulb, can cause charging system problems. (00209a)

If either headlamp bulb filament burns out, discard bulb and replace. Use only direct replacement bulbs as specified in the Parts Catalog.

BULB REMOVAL: ALL BUT FLD

NOTICE

Never touch the quartz bulb. Fingerprints will etch the glass and decrease bulb life. Handle the bulb with paper or a clean, dry cloth. Failure to do so could result in bulb damage. (00210b)

Single Bulb Headlamp

1. See Figure 7-26. Loosen screw (19) and nut (18). Remove trim ring (17).
2. Remove boot (4) from back of headlamp lens (16).
3. Disconnect headlamp connector (2) from bulb (6).
4. See Figure 7-25. Squeeze wire retaining clip ends to unhook them from notches in headlamp assembly.

⚠WARNING

Handle bulb carefully and wear eye protection. Bulb contains gas under pressure, which, if not handled carefully, could cause serious eye injury. (00062b)

5. Pivot wire retaining clip away from bulb. Remove bulb from headlamp assembly.

NOTE

*Verify that connector contacts on **new** bulb are clean before installation.*

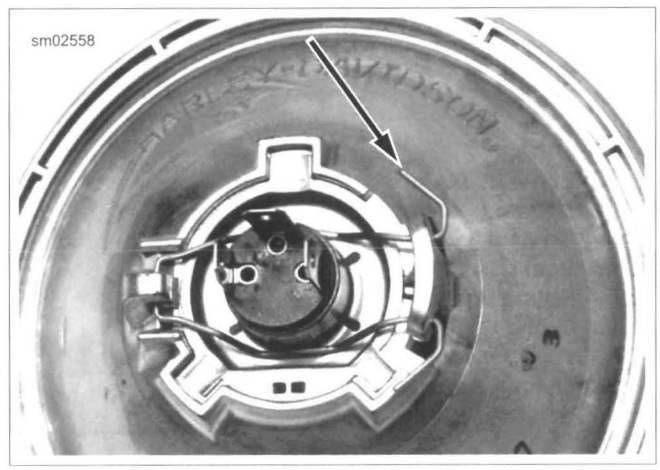

Figure 7-25. Wire Retaining Clip

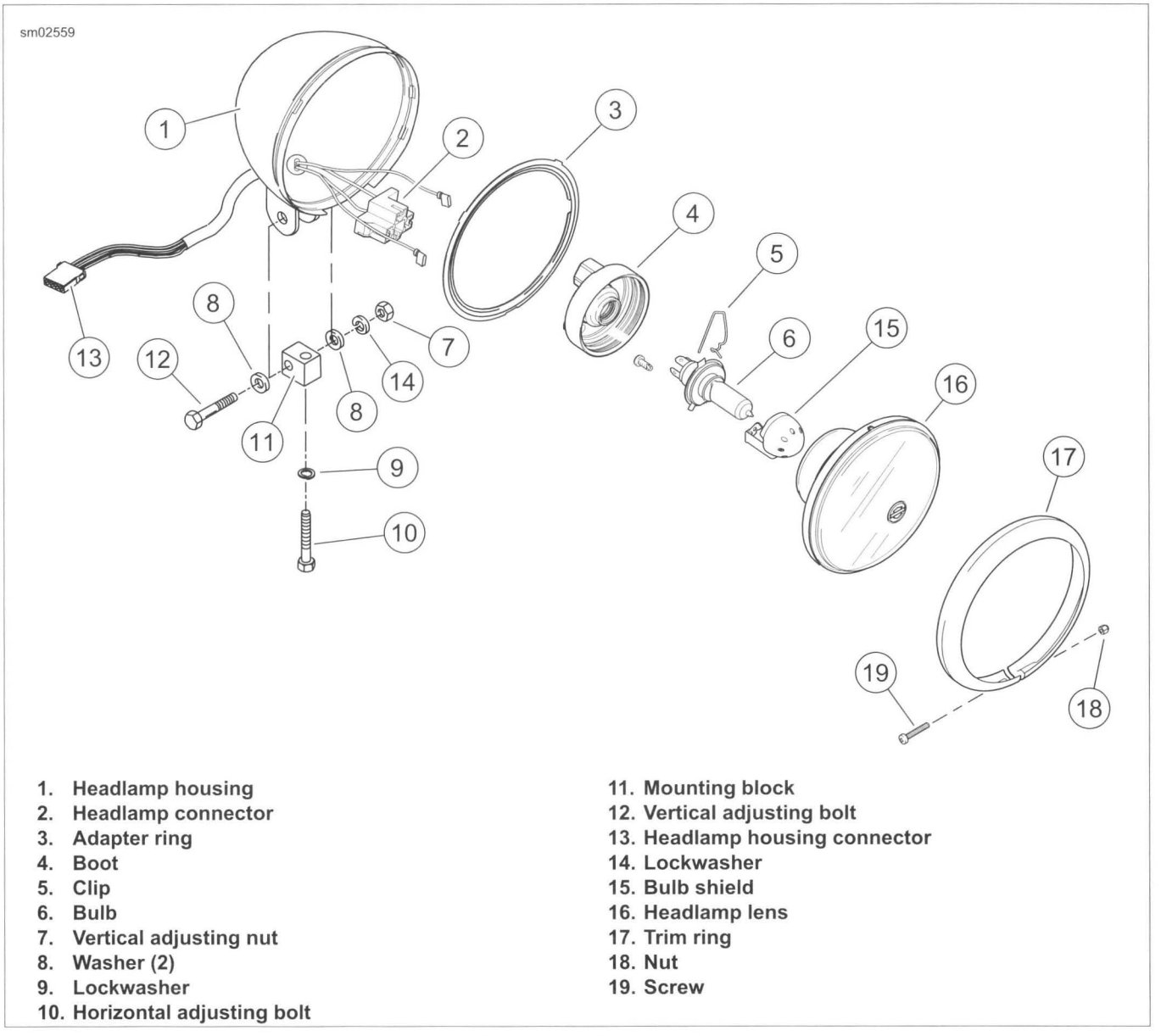

1. Headlamp housing
2. Headlamp connector
3. Adapter ring
4. Boot
5. Clip
6. Bulb
7. Vertical adjusting nut
8. Washer (2)
9. Lockwasher
10. Horizontal adjusting bolt
11. Mounting block
12. Vertical adjusting bolt
13. Headlamp housing connector
14. Lockwasher
15. Bulb shield
16. Headlamp lens
17. Trim ring
18. Nut
19. Screw

Figure 7-26. Single Bulb Headlamp

Dual Bulb Headlamp

1. See Figure 7-28. Remove two screws (1) and trim ring (6).
2. Pull reflector and lens assembly (5) away from the headlamp housing (2).
3. See Figure 7-27. Raise connector lock (1). Press connector latch (2) and disconnect connector.

⚠WARNING

Handle bulb carefully and wear eye protection. Bulb contains gas under pressure, which, if not handled carefully, could cause serious eye injury. (00062b)

4. Rotate bulb assembly counterclockwise to remove from housing.

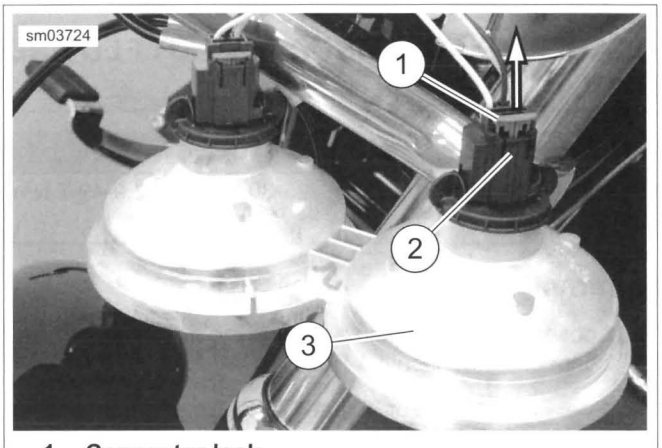

1. Connector lock
2. Connector latch
3. Vent (yellow dot)

Figure 7-27. Dual Headlamp Connector

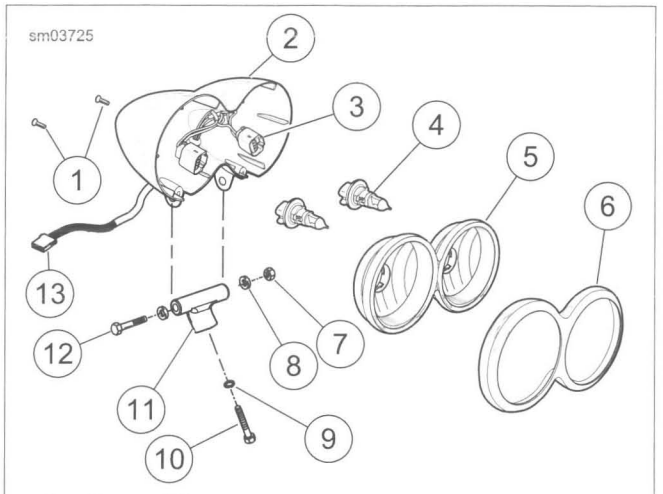

1. **Screw (2)**
2. **Headlamp housing**
3. **Headlamp connector (2)**
4. **Bulb (2)**
5. **Reflector and lens assembly**
6. **Trim ring**
7. **Vertical adjusting nut**
8. **Washer (2)**
9. **Lockwasher**
10. **Horizontal adjusting bolt**
11. **Mounting block**
12. **Vertical adjusting bolt**
13. **Headlamp housing connector**

Figure 7-28. Dual Bulb Headlamp

BULB INSTALLATION: ALL BUT FLD

Install **new** bulb and assemble headlamp components. To adjust light beam, see 1.20 HEADLAMP ALIGNMENT.

NOTES

- ***Single bulb headlamp:*** *When reassembling headlamp, make sure slots and tabs in headlamp, adapter ring and trim ring are aligned.*
- ***Dual bulb headlamp:*** *See Figure 7-27. Verify vents (3) (yellow dots) are UP when installing reflector assembly in housing.*

HEADLAMP ASSEMBLY: ALL BUT FLD AND FXDL

FASTENER	TORQUE VALUE	
Headlight horizontal adjusting bolt	25-30 ft-lbs	33.9-40.7 Nm

Removal

1. Loosen fuel tank to gain access to the headlamp harness connector (13). See 4.4 FUEL TANK.
2. See Figure 7-26 or Figure 7-28. Separate headlamp housing connector (13) [38].
3. Remove vertical adjusting bolt (12), vertical adjusting nut (7), washer (8) and lockwasher (14), if equipped.
4. Remove headlamp assembly.
5. Disassemble and repair headlamp as necessary.

Installation

1. See Figure 7-26 or Figure 7-28. Attach headlamp assembly to mounting block (11) using vertical adjusting bolt (12) vertical adjusting nut (7), washer (8) and lockwasher (14), if equipped.
2. Tighten horizontal adjusting bolt (10) to 25-30 ft-lbs (33.9-40.7 Nm).
3. Connect electrical harness connector. Attach fuel tank. See 4.4 FUEL TANK.
4. Align headlamp. See 1.20 HEADLAMP ALIGNMENT.

HEADLAMP ASSEMBLY: FXDL

Removal

1. Remove left side steering head plug.
2. Disconnect headlamp connector.
3. See Figure 7-29. Remove snap plug on top of headlamp visor:
   a. Insert a small screwdriver through hole (1) on left side under visor (2).
   b. Push up on plug.
4. See Figure 7-30. Remove nut (5), lockwasher (4) and washer (3).

Installation

1. Install **new** headlamp assembly into visor (2).
2. Install washer (3), lockwasher (4) and nut on headlamp threads.
3. Connect headlamp connector.
4. Install left side steering head plug.
5. Adjust headlamp. See 1.20 HEADLAMP ALIGNMENT.
6. Install steering head plug (6).

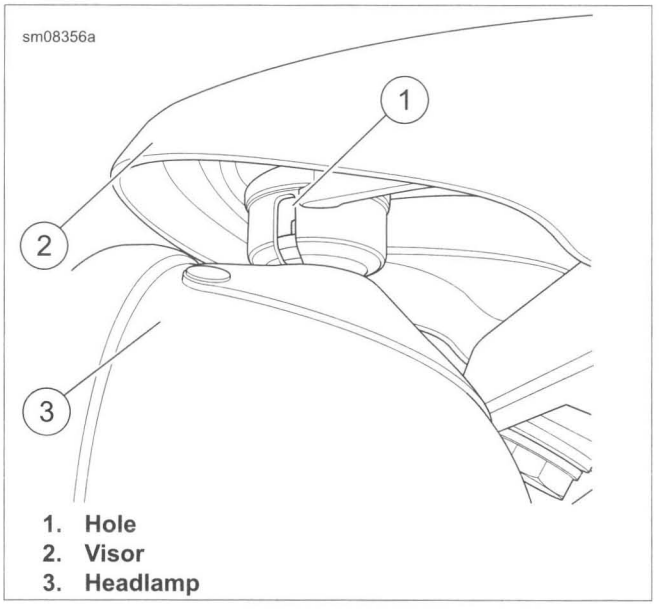

1. **Hole**
2. **Visor**
3. **Headlamp**

Figure 7-29. Headlamp Visor: FXDL

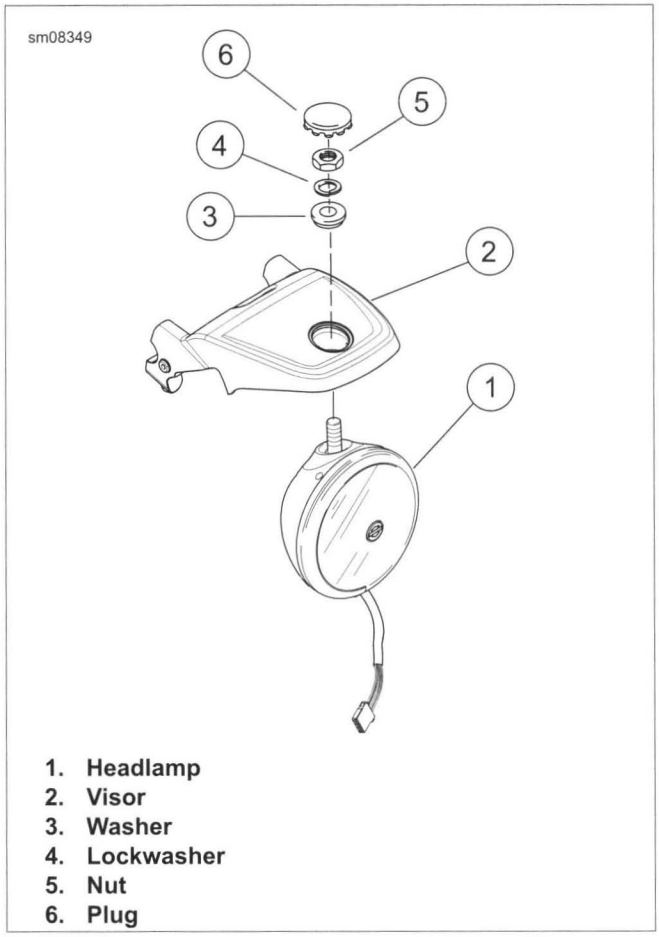

1. **Headlamp**
2. **Visor**
3. **Washer**
4. **Lockwasher**
5. **Nut**
6. **Plug**

Figure 7-30. Headlamp Assembly

HEADLAMP VISOR: FXDL

FASTENER	TORQUE VALUE	
Headlamp visor bolts: FXDL	30-40 ft-lbs	40.7-54.2 Nm
Riser clamp fasteners: FXDL	15-19 ft-lbs	20.3-25.8 Nm
Brake line clamp fastener: FXDL	45-65 **in-lbs**	5.1-7.3 Nm
Throttle cable guide fastener: FXDL	45-65 **in-lbs**	5.1-7.3 Nm
Clutch cable guide fastener: FXDL	45-65 **in-lbs**	5.1-7.3 Nm

Removal

1. Cover painted parts to protect finish.
2. Remove headlamp assembly. See 7.12 HEADLAMP, Headlamp Assembly: FXDL.
3. Remove right side steering head plug.
4. Disconnect left and right control connectors.
5. Pull harnesses through headlamp visor.
6. Remove throttle cable guide and brake line clamp from headlamp visor on right side.
7. Remove clutch cable guide from left side of headlamp visor.
8. Mark riser location to align with clamp surfaces.
9. See Figure 7-31. Remove riser clamp screws (10) and lower riser clamps (9). Rest handlebar assembly on covered fuel tank.
10. Remove headlamp visor mounting bolts (1). Remove headlamp visor (7).

Installation

1. See Figure 7-31. Inspect isolator (12). Replace if necessary, by pulling out isolator and pressing **new** isolator in place. No special tools are needed.

NOTE

See Figure 7-32. When installing riser clamps (2), make sure boss (5) is positioned over slot (4).

2. See Figure 7-31. Install headlamp visor (7) with mounting bolts (1). Tighten to 30-40 ft-lbs (40.7-54.2 Nm).
3. Install handlebar assembly. Position risers to align with marks from previous position. Secure with lower riser clamps (9) and riser clamp screws (10).
4. See Figure 7-33. Tighten clamps in sequence shown to 15-19 ft-lbs (20.3-25.8 Nm).
5. Install brake line clamp to headlamp bracket on right side. Tighten fastener to 45-65 **in-lbs** (5.1-7.3 Nm).
6. Install throttle cable guide to headlamp bracket on right side. Tighten fastener to 45-65 **in-lbs** (5.1-7.3 Nm).
7. Install clutch cable guide to headlamp bracket on left side. Tighten fastener to 45-65 **in-lbs** (5.1-7.3 Nm).
8. Route handlebar wires through bracket. Mate hand control electrical connectors.
9. Install frame plug.
10. Install headlamp.

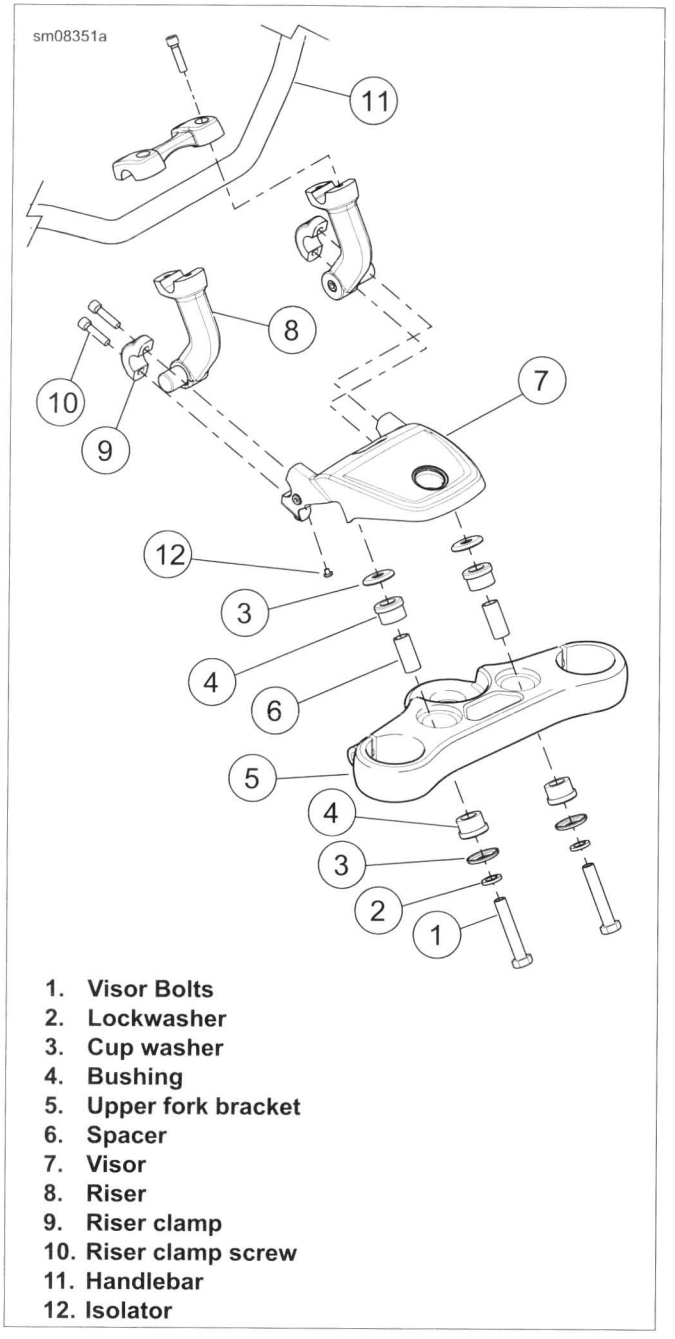

1. Visor Bolts
2. Lockwasher
3. Cup washer
4. Bushing
5. Upper fork bracket
6. Spacer
7. Visor
8. Riser
9. Riser clamp
10. Riser clamp screw
11. Handlebar
12. Isolator

Figure 7-31. Headlamp Visor Assembly: FXDL

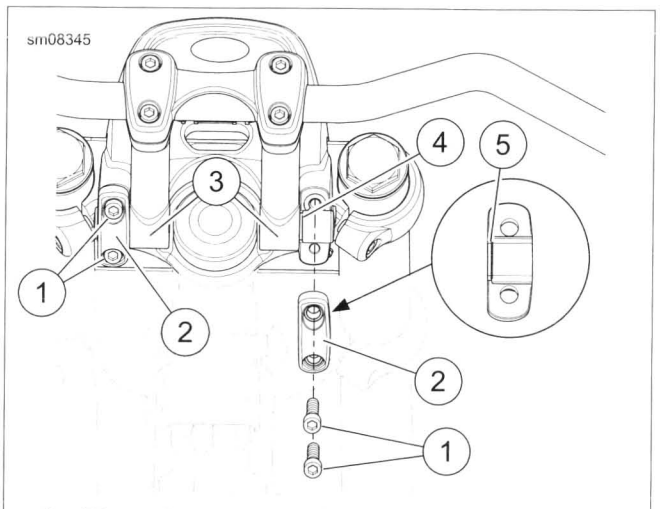

1. Riser clamp screw (4)
2. Riser clamp (2)
3. Riser (2)
4. Slot
5. Boss

Figure 7-32. Riser Assembly

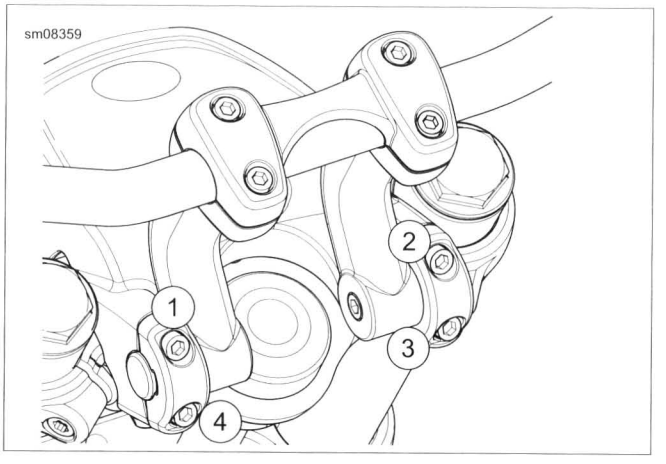

Figure 7-33. Riser Torque Sequence: FXDL

HEADLAMP: FLD

FASTENER	TORQUE VALUE	
Headlamp screws: FLD	7-10 **in-lbs**	0.8-1.1 Nm
Headlamp door screw: FLD	9-18 **in-lbs**	1.0-2.0 Nm

Removal

1. See Figure 7-34. Remove screw at bottom of headlamp door (1). Remove headlamp door.
2. Remove screws (3) securing headlamp assembly.
3. Remove boot (6) from back of reflector assembly (4).
4. Remove headlamp connector from bulb (5).

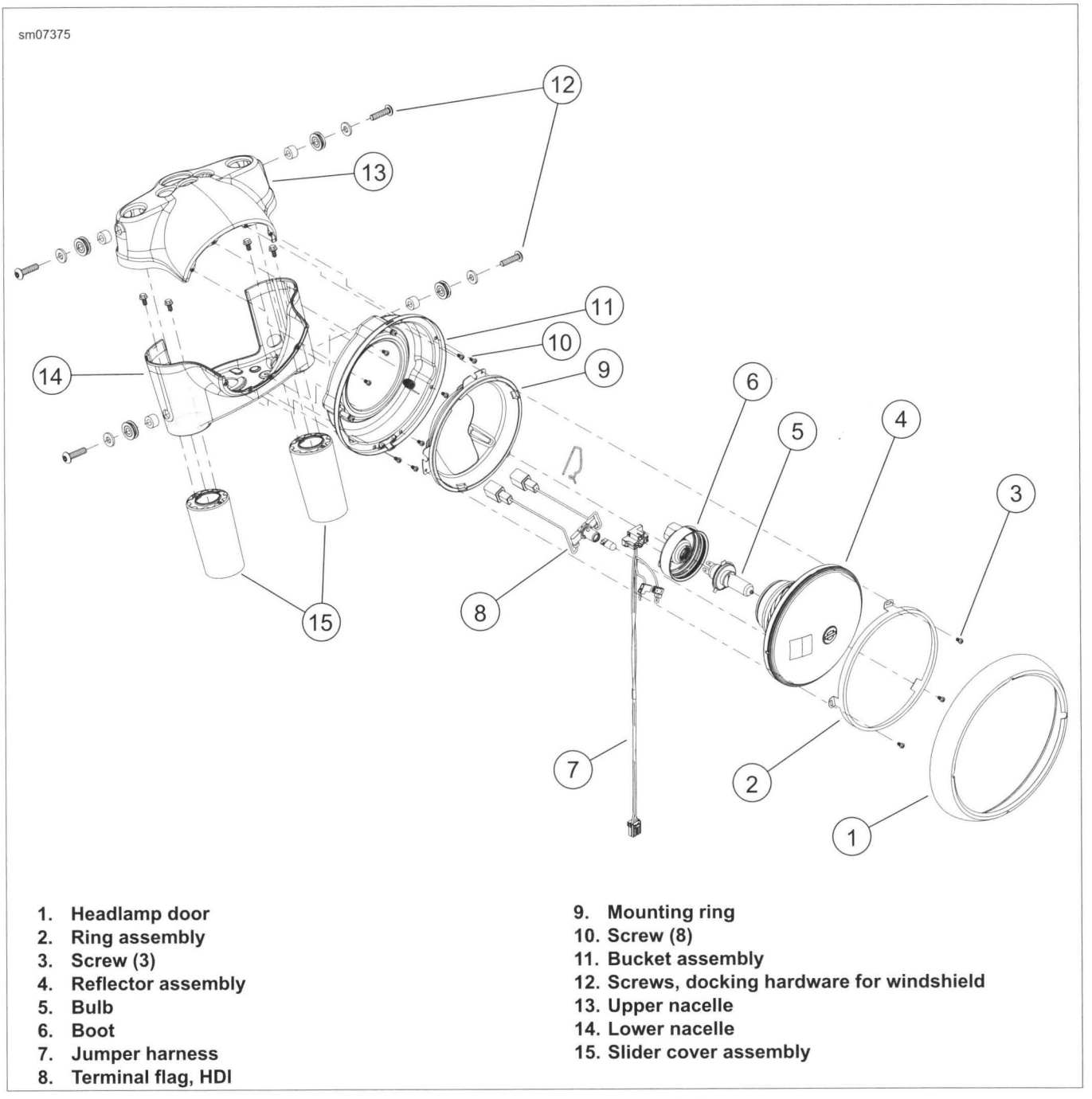

1. **Headlamp door**
2. **Ring assembly**
3. **Screw (3)**
4. **Reflector assembly**
5. **Bulb**
6. **Boot**
7. **Jumper harness**
8. **Terminal flag, HDI**
9. **Mounting ring**
10. **Screw (8)**
11. **Bucket assembly**
12. **Screws, docking hardware for windshield**
13. **Upper nacelle**
14. **Lower nacelle**
15. **Slider cover assembly**

Figure 7-34. Headlamp Assembly: FLD Models

Bulb Replacement

NOTICE

When replacement is required, use only the specified sealed beam unit or bulb, available from a Harley-Davidson dealer. An improper wattage sealed beam or bulb, can cause charging system problems. (00209a)

NOTE

The headlamp uses a replaceable quartz halogen bulb. Handle this fragile part with care.

1. See Figure 7-34. Remove reflector assembly (4).
2. Remove boot (6) at back of reflector assembly.

NOTE

Loosening retainer screw one-half to one turn helps in releasing clip.

3. See Figure 7-35. Release wire retaining clip (1) from retainer (2). Swing wire retaining clip out of the way.

⚠WARNING

Handle bulb carefully and wear eye protection. Bulb contains gas under pressure, which, if not handled carefully, could cause serious eye injury. (00062b)

4. Remove and discard bulb.

NOTICE

Never touch the quartz bulb. Fingerprints will etch the glass and decrease bulb life. Handle the bulb with paper or a clean, dry cloth. Failure to do so could result in bulb damage. (00210b)

5. Install **new** bulb. Align the tab on the bulb with the notch in the headlamp housing.

NOTE

If retainer screw was loosened to release wire retaining clip, hold retainer in place and tighten screw until snug. Verify that reflector cone is still centered under decorative logo. If it is not, loosen retainer screw and repeat step until centered.

6. See Figure 7-35. Rotate wire retaining clip (1) into place and latch under lip of retainer (2).
7. Install rubber boot at back of housing.
8. **HDI models:** Rotate position lamp bulb retainer one-quarter turn counterclockwise to remove. Replace bulb. Install bulb retainer in lamp housing.

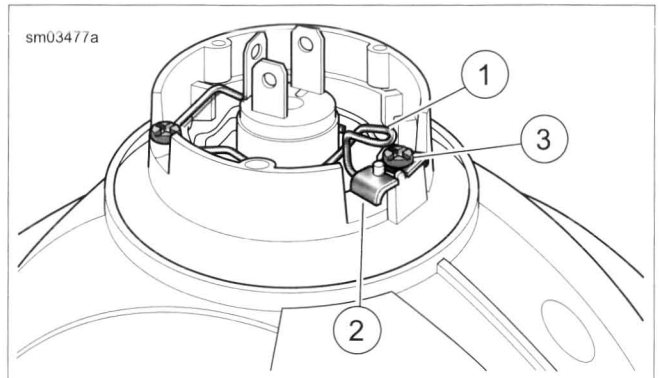

1. **Wire retaining clip**
2. **Retainer**
3. **Retainer screw**

Figure 7-35. Headlamp Bulb Assembly

Installation

1. Install headlamp connector on headlamp bulb.
2. Install headlamp assembly screws. Tighten to 7-10 **in-lbs** (0.8-1.1 Nm).
3. Fit the headlamp door spring into slot at top of headlamp housing. Secure the headlamp door (chrome ring) with screw. Tighten to 9-18 **in-lbs** (1.0-2.0 Nm).

GENERAL

FLD models have a tail lamp that uses a mini harness and circuit board to simplify replacement.

FXDF and FXDWG HDI models use an LED assembly with no replaceable bulb. The cover on the tail lamp is not removable.

FXDWG, FXDB and FXDBP domestic models combine the stop lamp with the turn signals. See 7.14 TURN SIGNALS.

FXDB Canadian models use a center mount license plate lamp with a built-in stop lamp.

TAIL LAMP BULB REPLACEMENT: FLD AND FXDL

FASTENER	TORQUE VALUE	
Tail lamp lens screws	20-24 **in-lbs**	2.3-2.7 Nm

1. Turn ignition switch OFF.
2. See Figure 7-36. Remove two screws and lens (1) from base (2).

NOTE

Disconnect 4-pin multilock connector from circuit board to simplify bulb removal.

3. Remove bulb assembly from lens (1). Remove bulb.
4. Coat base of **new** bulb with ELECTRICAL CONTACT LUBRICANT. Install **new** bulb.
5. Install bulb assembly to lens.
6. If removed, connect 4-pin multilock connector (3) to circuit board.
7. Install lens (1) to base (2) with two screws. Tighten to 20-24 **in-lbs** (2.3-2.7 Nm).

⚠WARNING

Be sure that all lights and switches operate properly before operating motorcycle. Low visibility of rider can result in death or serious injury. (00316a)

8. Turn ignition on. Check operation of all lamps.

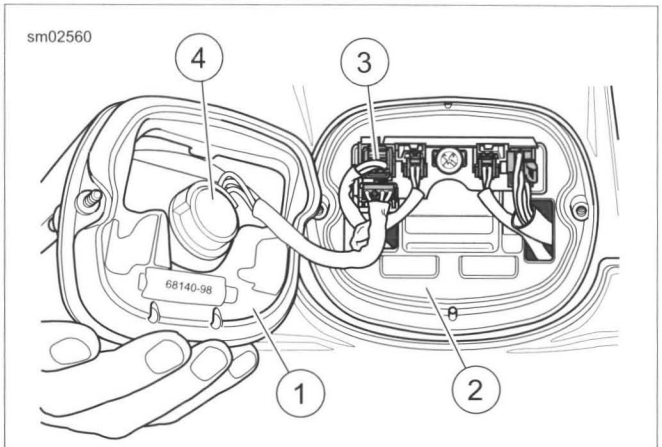

1. **Lens**
2. **Base**
3. **4-pin multilock connector**
4. **Bulb assembly**

Figure 7-36. Tail Lamp: FLD Models

BASE REPLACEMENT: FLD AND FXDL

FASTENER	TORQUE VALUE	
Tail lamp base screws: FLD, FXDL	40-48 **in-lbs**	4.5-5.4 Nm
Tail lamp lens screws: FLD, FXDL	20-24 **in-lbs**	2.3-2.7 Nm

1. See Figure 7-36. Remove two screws and lens (1) from base (2).
2. Press locking tab and remove 4-pin multilock connector from pin housing.
3. See Figure 7-37. Using a terminal pick (1) or small screwdriver, press locking tabs. Remove two 2-pin turn signal connectors (2) and 6-pin Power In connector from pin housing.
4. See Figure 7-38. Remove screw, pin housing (1) and circuit board (2) from base.
5. Remove two nuts, screws and base from rear fender.
6. Install **new** base to rear fender with two screws and nuts. Tighten to 40-48 **in-lbs** (4.5-5.4 Nm).
7. Attach circuit board (2) and pin housing (1) to base with screw. Circuit board snaps in on bottom.

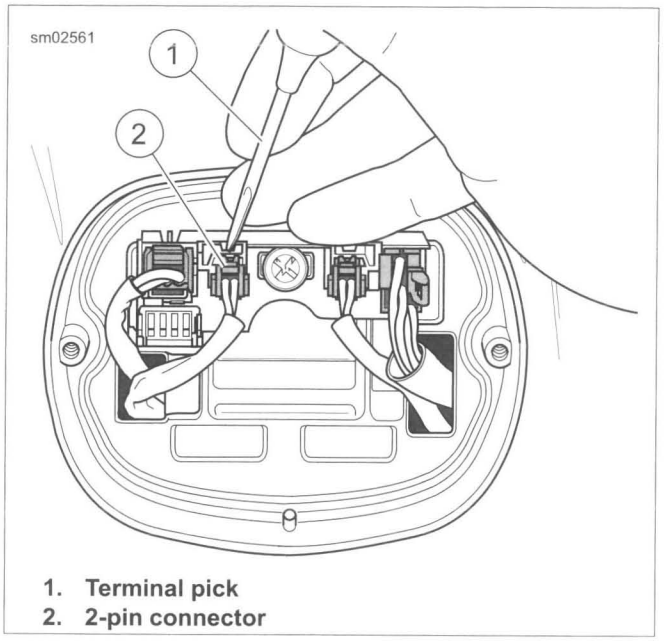

1. **Terminal pick**
2. **2-pin connector**

Figure 7-37. Removing 2-Pin Connectors

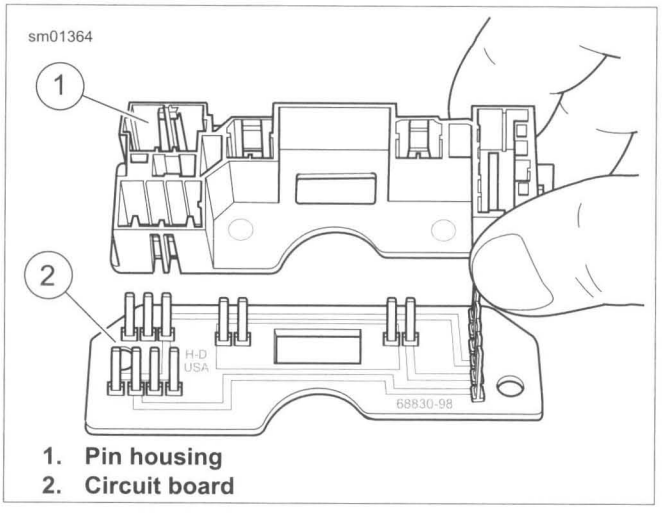

1. **Pin housing**
2. **Circuit board**

Figure 7-38. Pin Housing and Circuit Board

8. See Figure 7-39. Install connectors (1-4) to pin housing.
9. See Figure 7-36.Install lens (1) to base (2) with two screws. Tighten to 20-24 **in-lbs** (2.3-2.7 Nm).

⚠WARNING

Be sure that all lights and switches operate properly before operating motorcycle. Low visibility of rider can result in death or serious injury. (00316a)

10. Turn ignition on. Check operation of tail lamp and turn signals.

NOTE

Refer to Table 7-7. Cavity numbers are on back side of secondary locks.

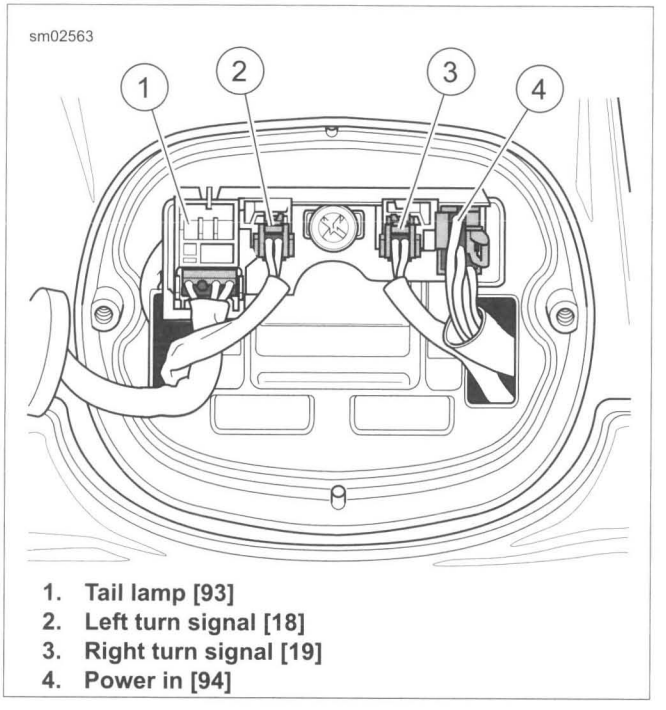

1. **Tail lamp [93]**
2. **Left turn signal [18]**
3. **Right turn signal [19]**
4. **Power in [94]**

Figure 7-39. Wire Location at Connectors

Table 7-7. Tail Lamp Wires: FLD AND FXDL

FUNCTION	NO.	TYPE	WIRE COLOR	CAVITY
Right turn signal	[19]	2-pin Multilock	V/BN	1
			BK	2
Left turn signal	[18]	2-pin Multilock	V/BN	1
			BK	2
Tail lamp	[93]	4-pin Multilock	BE	1
			HDI only-O/W or open on domestic models	2
			R/Y	3
			BK	4

Table 7-7. Tail Lamp Wires: FLD AND FXDL

FUNCTION	NO.	TYPE	WIRE COLOR	CAVITY
Power in	[94]	6-pin Multilock	O/W	1
			BN (V on FXDF)	2
			BE	3
			R/Y	4
			V (BN on FXDF)	5
			BK	6

BASE REPLACEMENT: FXDWG/HDI AND CANADA

FASTENER	TORQUE VALUE	
Tail lamp base screws: FXDWG (HDI and Canada)	66-90 **in-lbs**	7.5-10.1 Nm

NOTE

U.S. only, FXDB, FXDBP and FXDWG models combine the tail lamp with the turn signals.

1. See Figure 7-40. Remove plastic plug (2) from under rear fender (1).
2. Remove tail lamp screws (4).
3. Lift slightly on tail lamp (3) and disconnect gray four-way tail lamp connector (5).

NOTE

While installing tail lamp onto fender, make sure four-way turn signal socket connectors (6) fit properly into tail lamp housing. Verify that the wires do not get pinched between tail lamp and rear fender.

4. Install gray four-way tail lamp connector (5) to tail lamp and place tail lamp into position on fender.
5. Install tail lamp screws (4). Tighten to 66-90 **in-lbs** (7.5-10.1 Nm).
6. Install plastic plug (2).

⚠WARNING

Be sure that all lights and switches operate properly before operating motorcycle. Low visibility of rider can result in death or serious injury. (00316a)

7. Turn ignition on. Check operation of all lamps.

NOTE

Refer to Table 7-8 for proper wire routing of tail lamp and turn signal connectors.

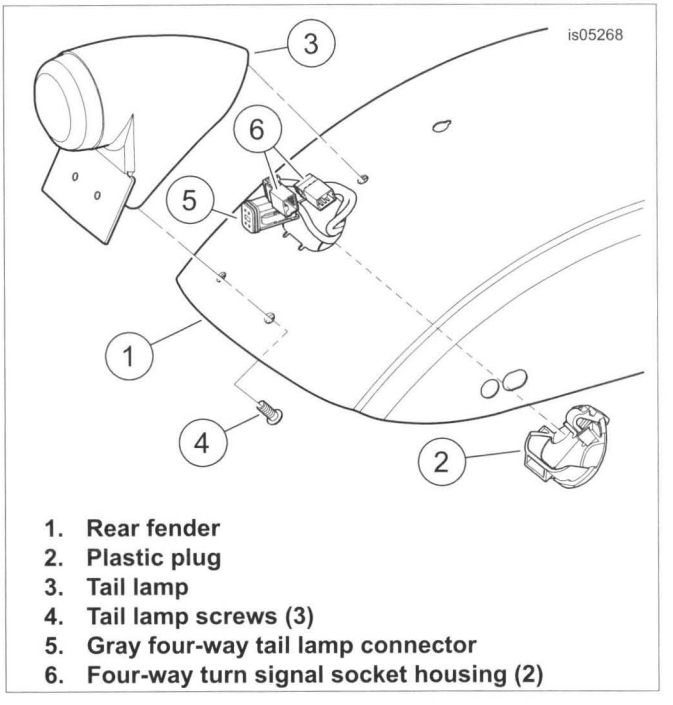

1. **Rear fender**
2. **Plastic plug**
3. **Tail lamp**
4. **Tail lamp screws (3)**
5. **Gray four-way tail lamp connector**
6. **Four-way turn signal socket housing (2)**

Figure 7-40. Rear Lighting Connections (FXDWG: HDI and Canada Models)

Table 7-8. Tail Lamp Wires: FXDWG

FUNCTION	NO.	TYPE	WIRE COLOR	CAVITY
Right turn signal	[19]	4-pin Multilock	BK	1
			BN	2
			BE	3
			Not used	4

Table 7-8. Tail Lamp Wires: FXDWG

FUNCTION	NO.	TYPE	WIRE COLOR	CAVITY
Left turn signal	[18]	4-pin Multilock	BK	1
			V	2
			BE	3
			Not used	4
Tail lamp	[93]	4-pin Deutsch	Not used	1
			R/Y	2
			O/W	3
			BK	4

TAIL LAMP REPLACEMENT: FXDF

FASTENER	TORQUE VALUE	
Tail lamp screws: FXDF	13-18 **in-lbs**	1.4-2.0 Nm
Tail lamp bracket screws: FXDF	60-80 **in-lbs**	6.8-9.0 Nm
License plate lamp screws: FXDF	10-17 **in-lbs**	1.1-1.9 Nm

Tail Lamp Removal

1. Remove rear fender. See 2.29 REAR FENDER.
2. See Figure 7-41. Remove clip (2).
3. Remove tail lamp bracket screws (7).
4. Remove tail lamp screws (6).
5. Disconnect connector (3).
6. See Figure 7-42. Cut cable strap (2). Remove wiring (3) from wire channel (4).

Tail Lamp Installation

1. See Figure 7-42. Connect connector (1) to tail lamp.
2. Install **new** cable strap.
3. Route wiring through channel.
4. See Figure 7-41. Install tail lamp screws (6). Tighten to 13-18 **in-lbs** (1.4-2.0 Nm).
5. Install tail lamp bracket (4) into fender. Install tail lamp bracket screws (7). Tighten to 60-80 **in-lbs** (6.8-9.0 Nm).
6. Install rear fender. See 2.29 REAR FENDER.

License Plate Lamp Replacement.

1. Remove rear fender. See 2.29 REAR FENDER.
2. Remove tail lamp.
3. Figure 7-43. Remove screws (5) and washers (4) securing cover (3) and license plate lamp (2) to tail lamp mounting bracket (1).
4. Remove wiring (7) from wire channel (8) in tail lamp bracket.
5. Remove wire terminals from connector (6).

NOTE

Wires can be installed in either connector cavity.

6. Install **new** wire terminals in connector.
7. Install license plate lamp, cover and screws into tail lamp bracket. Tighten screws to 10-17 **in-lbs** (1.1-1.9 Nm).
8. Connect tail lamp connector.
9. Route wiring through wire channel in tail lamp bracket.
10. Install tail lamp bracket into fender.
11. Install rear fender. See 2.29 REAR FENDER.

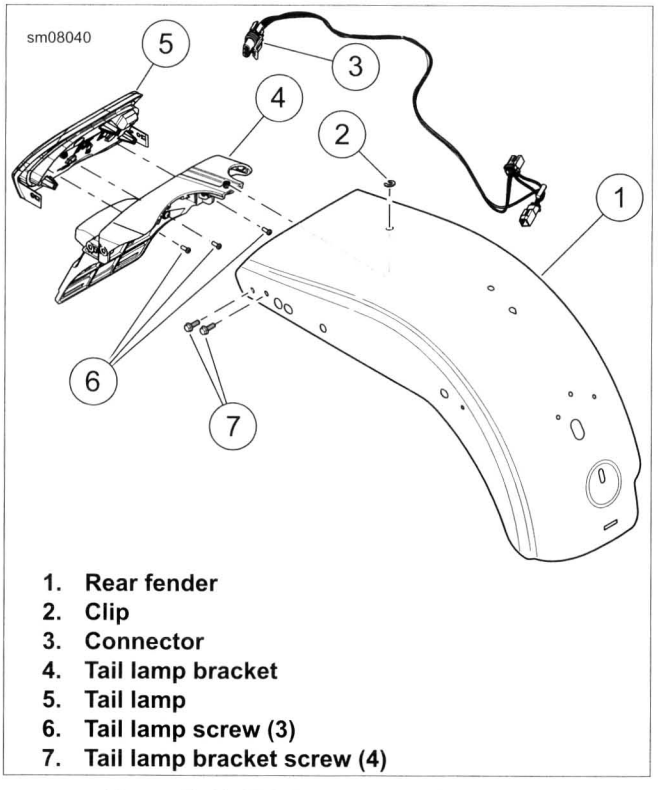

1. **Rear fender**
2. **Clip**
3. **Connector**
4. **Tail lamp bracket**
5. **Tail lamp**
6. **Tail lamp screw (3)**
7. **Tail lamp bracket screw (4)**

Figure 7-41. Tail Lamp Assembly: FXDF

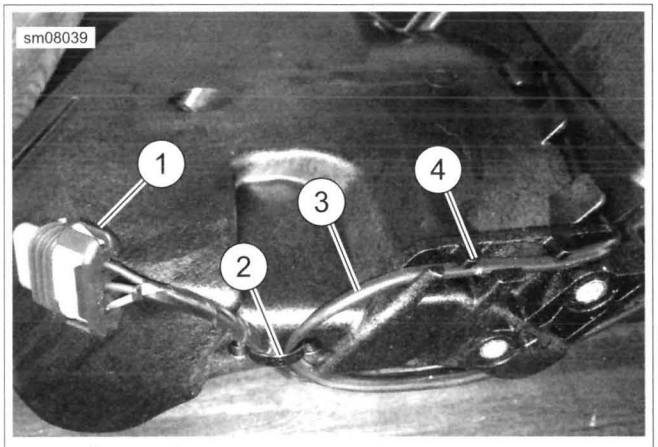

1. Connector
2. Cable strap
3. Wiring
4. Wire channel

Figure 7-42. Tail Lamp: FXDF

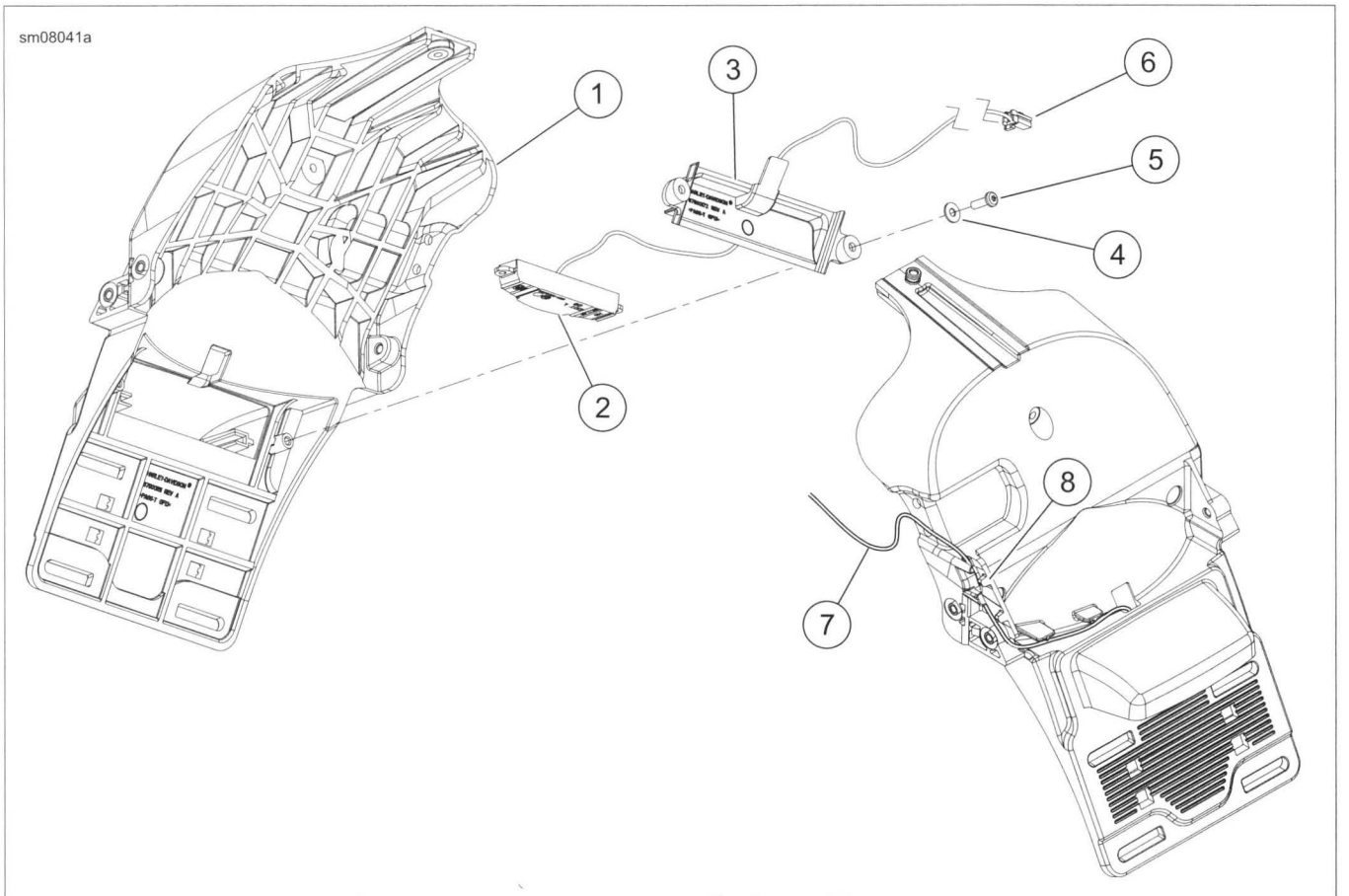

1. Tail lamp mounting bracket
2. License plate lamp
3. Cover
4. Washer (2)
5. Screw (2)
6. Connector
7. Wiring
8. Wire channel

Figure 7-43. License Plate Lamp: FXDF

TURN SIGNAL BULB REPLACEMENT: BULLET STYLE

NOTE

Models with LED lamps do not contain replacement bulbs. Replace the LED assembly.

1. See Figure 7-44. Insert a coin or the blade of a small screwdriver into the notch at the bottom of the lens cap. Carefully twist until the lens cap pops out of the lamp housing.
2. Push bulb in and rotate counterclockwise. Pull bulb from socket.
3. Inspect condition of electrical contacts in socket. If necessary, clean with a small wire brush and electrical contact cleaner.
4. Apply ELECTRICAL CONTACT LUBRICANT to contacts in socket and at bottom of **new** bulb.
5. Align pins on **new** bulb with pin guides in bulb socket. Push bulb in and turn clockwise to lock in place.
6. Snap lens cap onto the lamp housing with notch at bottom.

⚠WARNING

Be sure that all lights and switches operate properly before operating motorcycle. Low visibility of rider can result in death or serious injury. (00316a)

7. Check operation of all lamps.

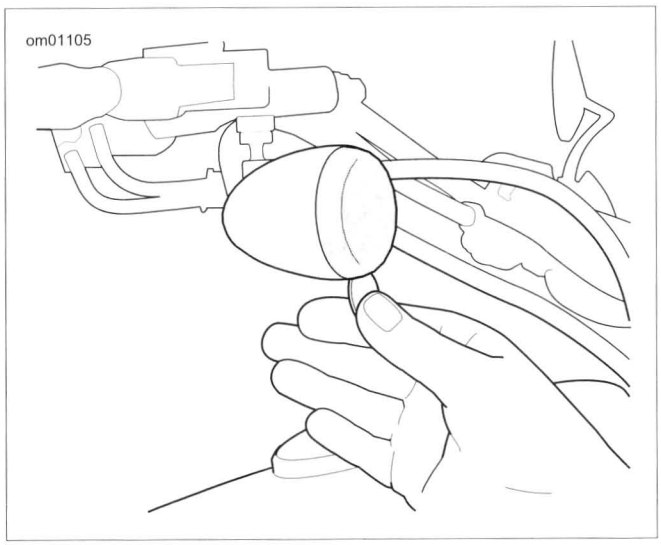

Figure 7-44. Turn Signal Lens Removal: Bullet Style

FRONT LAMP HOUSING REPLACEMENT: ALL BUT FLD

⚠WARNING

To prevent accidental vehicle start-up, which could cause death or serious injury, disconnect negative (-) battery cable before proceeding. (00048a)

NOTE

On FXDB, FXDL and FXDF models, the turn signal wiring is routed through the lower switch housings. The handlebar control modules are replaced with the turn signal lamps as an assembly.

1. Disconnect negative battery cable.

NOTE

Record wire routing and cable strap locations before removal.

2. Remove fuel tank fasteners, vent, fuel supply fitting and slide fuel tank back. See 4.4 FUEL TANK.
3. Disconnect fuel gauge connector [117].
4. Disconnect turn signal connector. Cut cable straps around turn signal wire conduit.
5. Remove turn signal lamp wires from multilock connector. See the electrical diagnostic manual.

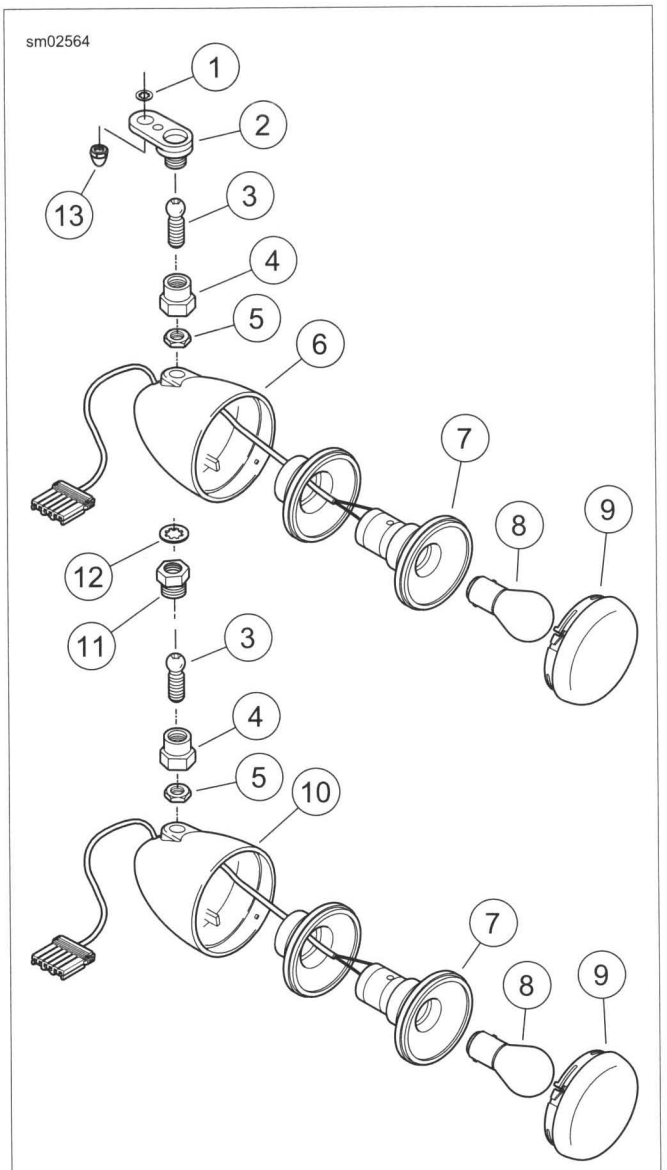

1. **Lockwasher**
2. **Ball receptacle**
3. **Ball stud**
4. **Ball stud clamp**
5. **Jamnut**
6. **Left lamp housing**
7. **Socket assembly**
8. **Bulb**
9. **Lens**
10. **Right lamp housing**
11. **Retainer**
12. **Lockwasher**
13. **Acorn nut**

Figure 7-45. Front Turn Signals

6. See Figure 7-45. Remove lamp housing:
   a. For left side housing, loosen ball stud clamp (4) until turn signal assembly is free from ball receptacle (2). Loosen jamnut (5) and remove ball stud (3) and ball stud clamp from lamp housing.
   b. For right side housing, loosen ball stud clamp (4) until turn signal assembly is free from retainer (11). Loosen jamnut (5) and remove ball stud (3) and ball stud clamp from lamp housing.
7. Pull turn signal wires from conduit. Remove turn signal lamp housing.
8. Lay old turn signal lamp housing next to **new** one. Cut **new** wires to length. Crimp **new** terminals onto wires. See the electrical diagnostic manual.
9. Install ball stud, ball stud clamp and jamnut in **new** lamp housing.
10. Install lamp housing:
    a. For left side housing, loosely install ball stud clamp to ball receptacle. Tighten jamnut.
    b. For right side housing, loosely install ball stud clamp to ball retainer. Tighten jamnut.
11. Using attached wire, pull turn signal wiring through conduit. Route wiring to connector location under fuel tank.
12. Install turn signal lamp wires in proper locations in multilock connector.
13. Connect turn signal connector [31]. Install connector inside frame backbone.
14. Connect fuel gauge connector.
15. Install fuel tank.
16. Connect negative battery cable.
17. Adjust turn signals:
    a. For left side lamp, adjust position of directional lamp as necessary. While holding lamp in position, tighten ball stud clamp.
    b. For right side lamp, adjust position of directional lamp as necessary. Hold retainer with a wrench then use another wrench to tighten ball stud clamp on right directional lamp.
18. Lay a protective blanket over fuel tank. Adjust lamps to prevent fuel tank contact. Always keep lens aimed forward.

⚠WARNING

Be sure that all lights and switches operate properly before operating motorcycle. Low visibility of rider can result in death or serious injury. (00316a)

19. Turn ignition switch ON. Test for proper turn signal operation.

REAR LAMP HOUSING REPLACEMENT: ALL BUT FLD

FASTENER	TORQUE VALUE	
Rear turn signal lamp fastener	12-16 ft-lbs	16.3-21.7 Nm

⚠WARNING

To prevent accidental vehicle start-up, which could cause death or serious injury, disconnect negative (-) battery cable before proceeding. (00048a)

1. Disconnect negative battery cable.

NOTE

Record wire routing and cable strap locations before removal.

2. Remove seat.
3. Disconnect turn signal wiring. See 7.14 TURN SIGNALS.
4. Cut cable straps around turn signal wires.
5. Remove turn signal lamp wires from multilock connector. See the electrical diagnostic manual.
6. See Figure 7-46. Remove fastener (7) and washer (6) inside rear fender. Then remove lamp housing (4) and lamp support (5).
7. Pull lamp housing wiring from conduit.
8. Lay old turn signal housing and wires next to **new** and cut **new** wires to length. Crimp **new** terminals onto wires. See the electrical diagnostic manual.
9. See Figure 7-47. Install **new** lamp housing and wires as shown. Install **new** cable straps, if removed. Insert terminals into connector and mate connector.
10. Rotate lamp assembly so lens points directly rearward.
11. While holding lamp assembly, tighten fastener to 12-16 ft-lbs (16.3-21.7 Nm).
12. Connect negative battery cable.

⚠WARNING

After installing seat, pull upward on seat to be sure it is locked in position. While riding, a loose seat can shift causing loss of control, which could result in death or serious injury. (00070b)

13. Install seat.

⚠WARNING

Be sure that all lights and switches operate properly before operating motorcycle. Low visibility of rider can result in death or serious injury. (00316a)

14. Turn ignition on. Test for proper turn signal operation.

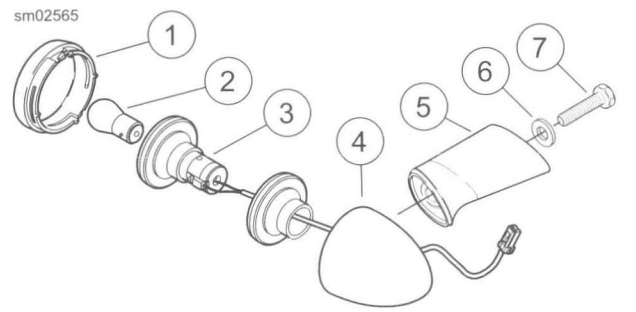

1. **Lens**
2. **Bulb**
3. **Socket assembly**
4. **Lamp housing**
5. **Lamp support**
6. **Washer**
7. **Fastener**

Figure 7-46. Rear Turn Signals

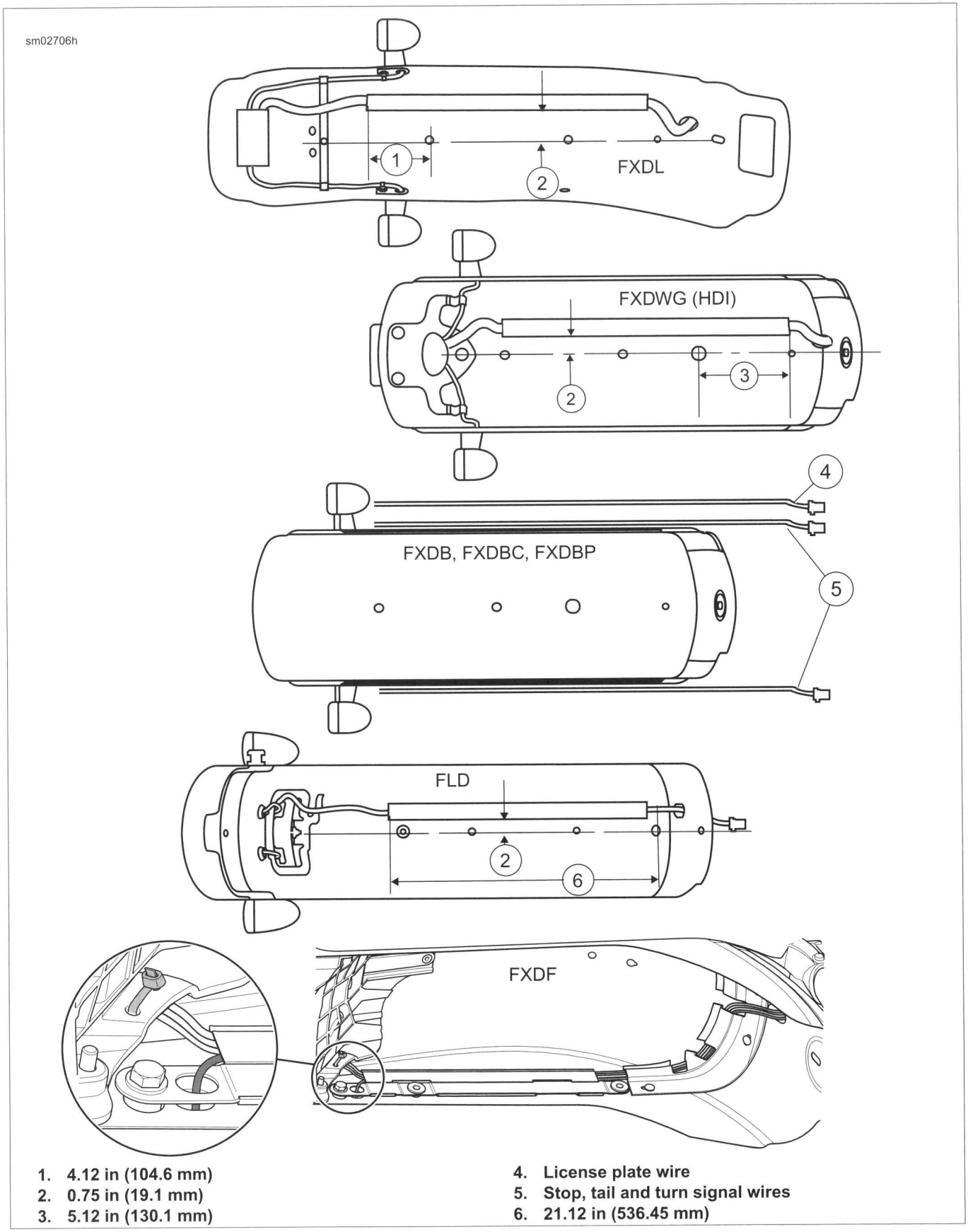

1. 4.12 in (104.6 mm)
2. 0.75 in (19.1 mm)
3. 5.12 in (130.1 mm)
4. License plate wire
5. Stop, tail and turn signal wires
6. 21.12 in (536.45 mm)

Figure 7-47. Rear Fender Harness Routing-Viewed from Underneath

FRONT TURN SIGNAL LAMPS: FLD

FASTENER	TORQUE VALUE	
Mirror acorn nut: FLD	84-156 **in-lbs**	9.5-17.6 Nm

Removal

1. See Figure 7-48. Remove grommet from frame.
2. Disconnect the turn signal lamp connector [31L/R] (4-place Multilock).
3. Remove all terminals from housing. See the electrical diagnostic manual.
4. Attach a chase wire to the harness. Pull up the harness through the headlamp nacelle.
5. Remove harness from retainers on handlebar.
6. See Figure 7-49. Loosen jamnut (3). Remove lamp housing from ball stud (6).
7. If turn signal bracket (2) requires removal, remove acorn nut (4).

NOTES

- *Reflector and harness are not serviced separately.*
- *Replace turn signal lamp assembly if damaged.*

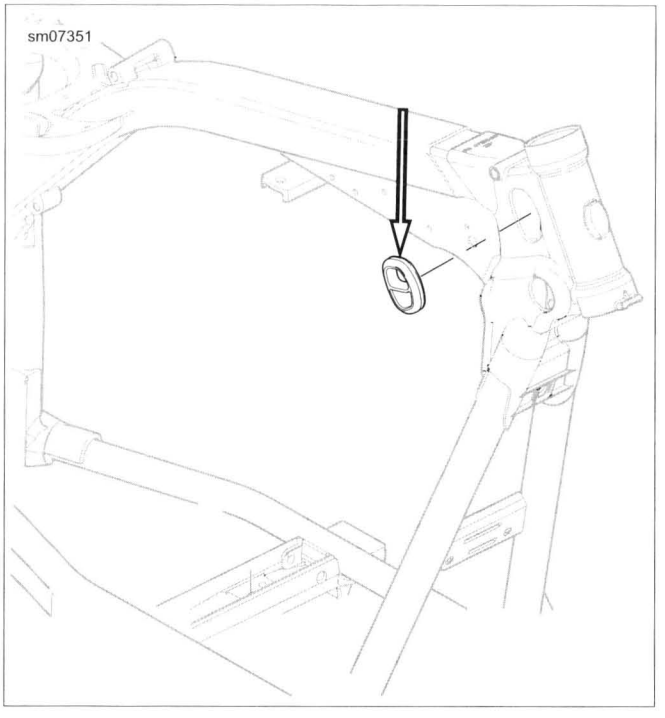

Figure 7-48. Frame Grommet

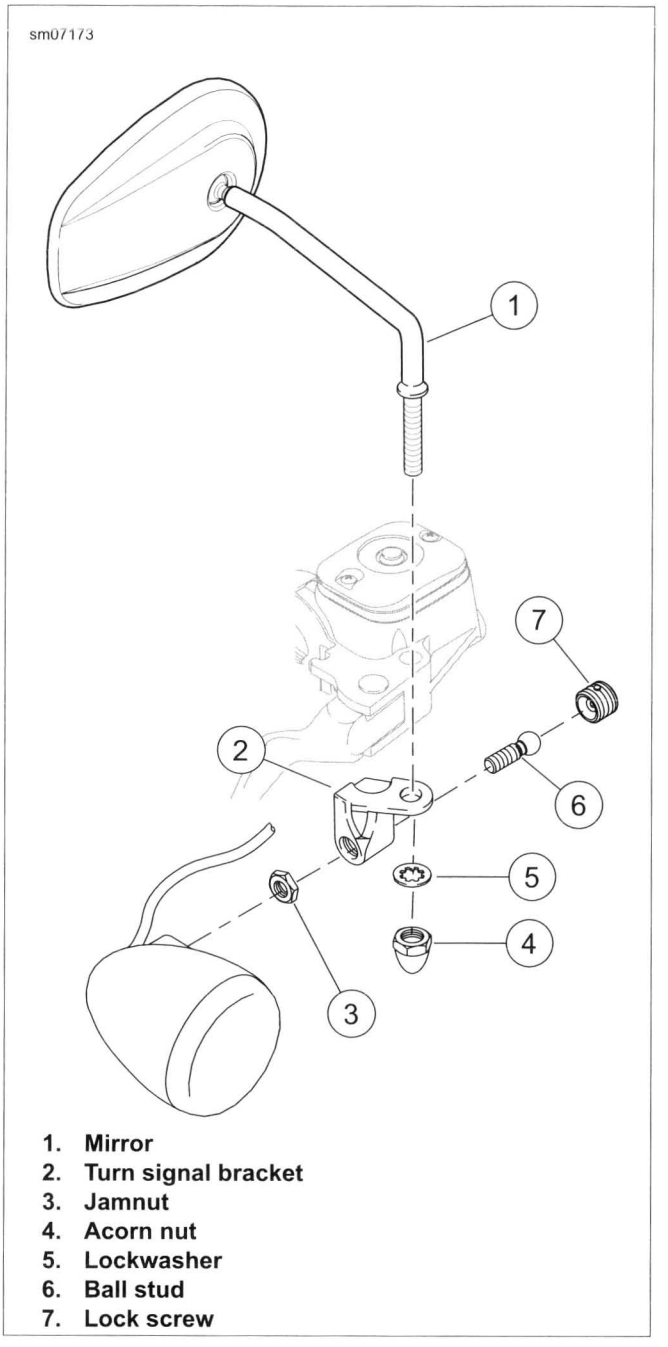

1. **Mirror**
2. **Turn signal bracket**
3. **Jamnut**
4. **Acorn nut**
5. **Lockwasher**
6. **Ball stud**
7. **Lock screw**

Figure 7-49. Front Turn Signals: FLD

Installation

1. See Figure 7-49. If removed, install turn signal bracket (2) and acorn nut (4). Tighten to 84-156 **in-lbs** (9.5-17.6 Nm).
2. Install lamp housing to ball stud (6). Tighten jamnut (3) securely.
3. Adjust turn signal as required and tighten lock screw (7).
4. Route wiring harness along handlebars. Secure with **new** anchors.
5. Route harness through hole in nacelle.
6. Install terminals into connector housing as shown in Table 7-9. See the electrical diagnostic manual.
7. See Figure 7-48. Connect to vehicle harness. Push connector into frame. Install grommet.

⚠WARNING

Be sure that all lights and switches operate properly before operating motorcycle. Low visibility of rider can result in death or serious injury. (00316a)

8. Turn ignition on. Check operation of turn signals.

Table 7-9. Turn Signal Lamp Connectors: FLD

CAVITY	COLOR
1	Violet
2	Black

REAR TURN SIGNAL LAMPS AND BRACKET: FLD

FASTENER	TORQUE VALUE	
License bracket screws: FLD	60-80 **in-lbs**	6.8-9.0 Nm
Rear light bar housing screws: FLD	84-144 **in-lbs**	9.5-16.3 Nm

Removal

1. Remove circuit board and chrome base. See 7.13 TAIL LAMP.
2. Release harnesses from cable clips inside fender.
3. See Figure 7-50. Remove light bar screws (3) to release light bar assembly. Remove bracket and harnesses from fender.
4. Remove license bracket screws (6) to release license bracket.
5. Remove license lamp screws (8) to release license lamp.
6. See 7.14 TURN SIGNALS, Rear Turn Signal Reflector/Isolator Repair: FLD if socket assembly (2) requires replacement.

Installation

1. See Figure 7-50. Install license lamp.
2. Install license bracket (7) and license bracket screws (6). Tighten to 60-80 **in-lbs** (6.8-9.0 Nm).
3. Verify grommets (4) are in place and feed harnesses through respective holes to inboard side of fender.
4. Apply one drop of LOCTITE 271 HIGH STRENGTH THREADLOCKER (red) to light bar screws (3).
5. Install rear turn signal lamps bracket and screws. Tighten to 84-144 **in-lbs** (9.5-16.3 Nm).
6. Install chrome base and circuit board assembly. See 7.13 TAIL LAMP.
7. Connect turn signal and license lamp connectors.
8. Secure harnesses under clips inside fender.

⚠WARNING

Be sure that all lights and switches operate properly before operating motorcycle. Low visibility of rider can result in death or serious injury. (00316a)

9. Turn ignition ON and test for proper lamp operation.

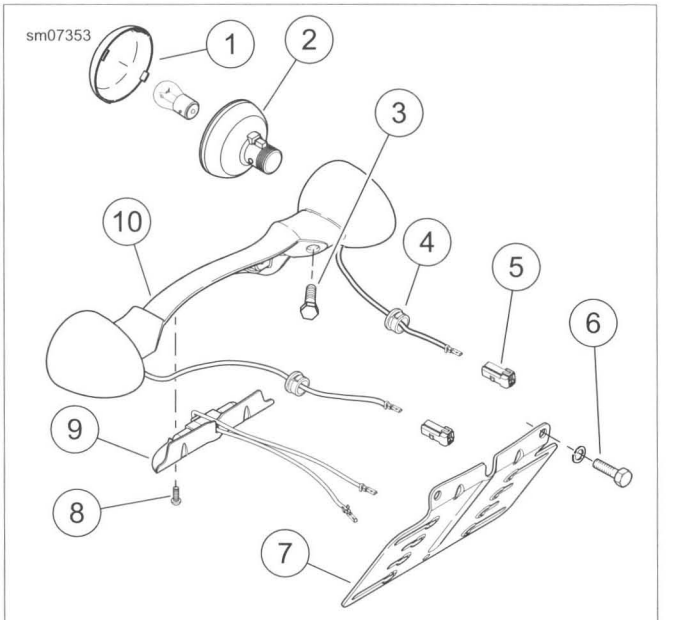

1. **Lens**
2. **Socket assembly**
3. **Light bar screw (2)**
4. **Grommet (2)**
5. **Connector housing (2)**
6. **License bracket screw (2)**
7. **License bracket**
8. **License lamp screw (2)**
9. **License lamp housing**
10. **Light bar housing**

Figure 7-50. Rear Turn Signals: FLD

REAR TURN SIGNAL REFLECTOR/ISOLATOR REPAIR: FLD

Removal

1. Remove circuit board and chrome base. See 7.13 TAIL LAMP.
2. Remove terminals from turn signal lamp connector housing. See the electrical diagnostic manual.
3. Release harness from cable clip inside fender.
4. Draw harness and terminals through hole to outboard side of fender.
5. Remove lens and bulb.
6. See Figure 7-51. Insert a right angle pick or a 7/64 in hex key through hole (4) and pull reflector from lamp.
7. Remove rubber isolator (3) from lamp if still installed.

Installation

1. Place **new** reflector/isolator assembly next to discarded unit and cut wires to proper length.

2. Install reflector/isolator assembly:
   a. Seat reflector assembly in rubber isolator, aligning tab on reflector with slot in isolator.
   b. Feed wires through lens opening and out through hole in lamp housing.
   c. Install grommet in lamp housing. Lightly lubricate grommet with glass cleaner, if necessary.
   d. Aligning tab on reflector with slot inside lamp, use thumbs of both hands and apply even pressure around outer edge of reflector assembly until fully seated.
   e. Liberally apply dielectric grease to contacts in socket and at bottom of bulb. Install bulb and lens with slot at bottom of lamp.
3. Install **new** terminals onto wires. See the electrical diagnostic manual.
4. Feed terminals through hole to inboard side of fender.
5. Install terminals into connector housing. Refer to Table 7-10. See the electrical diagnostic manual.
6. Capture harness in cable clip inside fender.
7. Install chrome base and circuit board assembly. See 7.13 TAIL LAMP.

⚠WARNING

Be sure that all lights and switches operate properly before operating motorcycle. Low visibility of rider can result in death or serious injury. (00316a)

8. Test lamp operation.

Table 7-10. Turn Signal Lamp Connectors: FLD

CAVITY	COLOR
1	Violet
2	Black

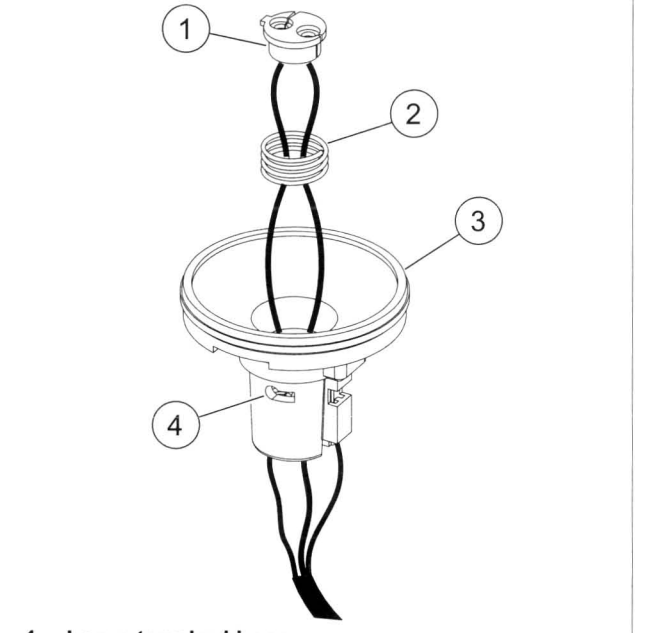

1. **Lamp terminal base**
2. **Spring**
3. **Rubber isolator**
4. **Hole**

Figure 7-51. Reflector Assembly

GENERAL

The CKP is a variable reluctance (VR) sensor. It generates an AC signal by sensing the passing of the 30 teeth machined in the left side flywheel. Two consecutive teeth are missing in the flywheel to establish a reference point. The CKP sends a signal to the electronic control module which references engine position (TDC) and engine speed.

REMOVAL

⚠WARNING

To prevent accidental vehicle start-up, which could cause death or serious injury, disconnect negative (-) battery cable before proceeding. (00048a)

1. Disconnect negative battery cable.

NOTE

Record wire routing and cable strap locations before removal.

2. Press upper front electrical caddy cover tabs to open cover.
3. See Figure 7-52. Remove CKP sensor connector (1) from front electrical caddy.
4. Disconnect CKP sensor connector.
5. See Figure 7-53. Remove screw and captive washer (2).
6. Carefully remove CKP (1).

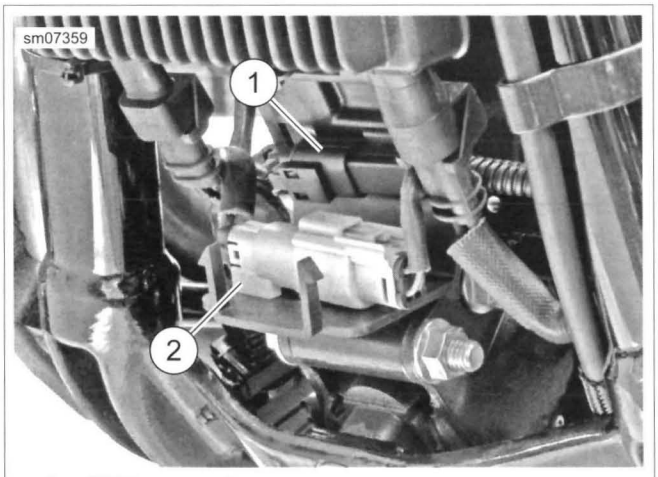

1. **CKP connector**
2. **Front O2 sensor connector**

Figure 7-52. Front Electrical Caddy

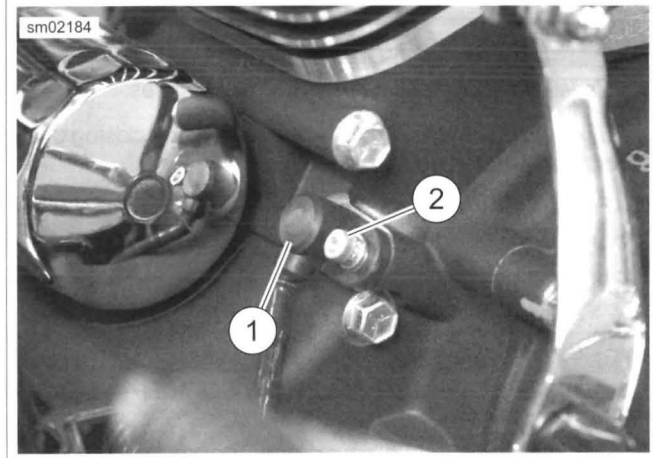

1. **CKP sensor**
2. **Screw and captive washer**

Figure 7-53. Crank Position Sensor

INSTALLATION

FASTENER	TORQUE VALUE	
CKP sensor screw	90-120 **in-lbs**	10.1-13.6 Nm

1. See Figure 7-54. Lubricate CKP sensor O-ring with clean engine oil.
2. See Figure 7-53. Install **new** CKP sensor with screw and captive washer. Tighten to 90-120 **in-lbs** (10.1-13.6 Nm).
3. See Figure 7-52. Connect CKP connector (1).
4. Close and latch front electrical caddy cover.
5. Connect negative battery cable.

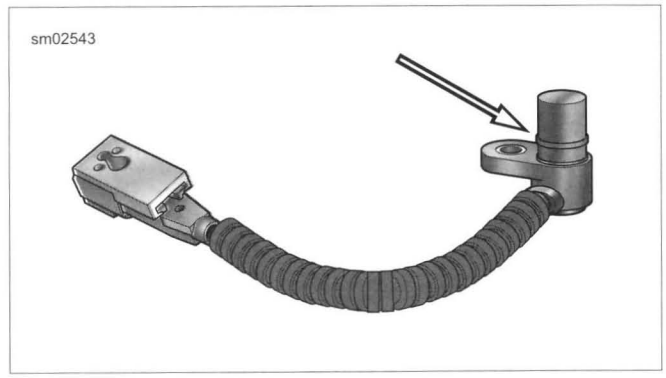

Figure 7-54. CKP Sensor O-Ring

GENERAL

NOTE

ACR is used only on 103 cu in and larger engines.

See Figure 7-55. The ECM controls opening and closing of the ACRs to assist starting.

See Figure 7-56. When open, compressed gases are released through the exhaust port.

REMOVAL

PART NUMBER	TOOL NAME
HD-48498-A	ACR SOLENOID SOCKET

1. Remove the rocker cover and the rocker box. See 3.10 TOP END SERVICE.
2. Separate the ACR rear [203R] or front [203F] connector from the main wiring harness and remove connectors from retainer clip.
3. See Figure 7-60. Use ACR SOLENOID SOCKET (Part No. HD-48498-A) to remove the ACR from the cylinder head.

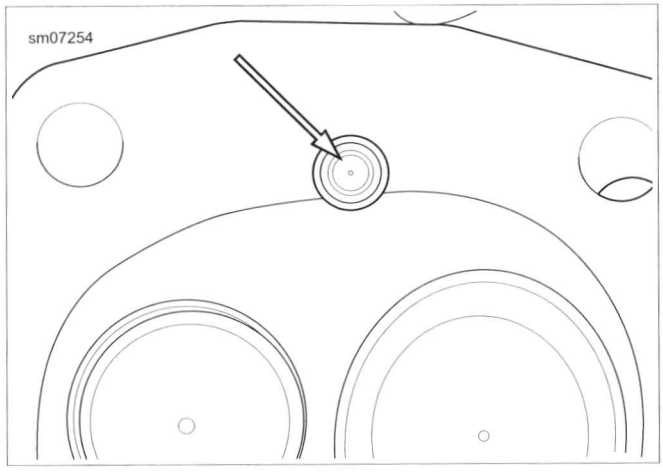

Figure 7-55. ACR Valve in Combustion Chamber

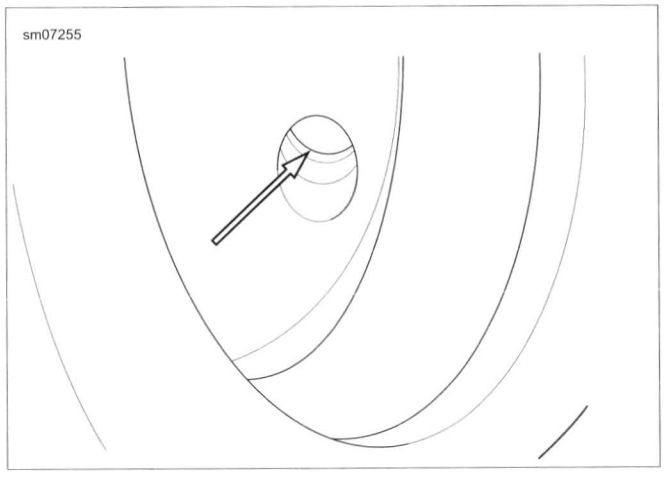

Figure 7-56. ACR Exhaust Port Release

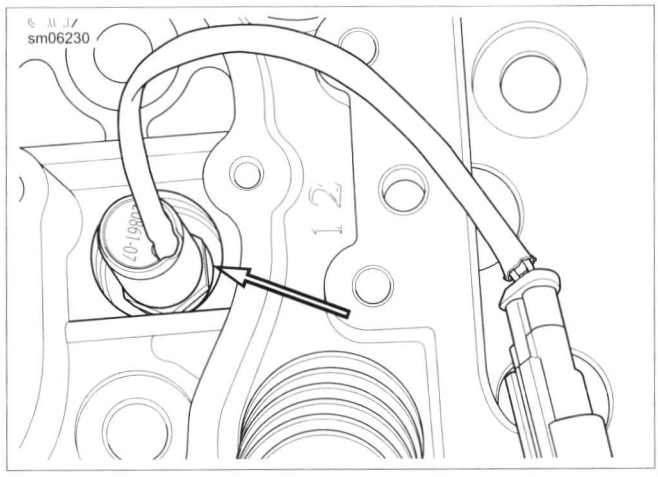

Figure 7-57. ACR in Head

INSTALLATION

PART NUMBER	TOOL NAME
HD-48498-A	ACR SOLENOID SOCKET

FASTENER	TORQUE VALUE	
ACR	13-17 ft-lbs	17.6-23.0 Nm

1. Verify that the copper seal washer is in place on the ACR.
2. See Figure 7-58. Identify a location around the threads of the ACR approximately one-third of distance from end.
3. See Figure 7-59. Apply three equally spaced dots of LOCTITE 246 MEDIUM STRENGTH/HIGH TEMPERATURE THREADLOCKER (blue) on threads.
4. To prevent cross-threading, install by hand and tighten finger-tight.
5. See Figure 7-60. Using ACR SOLENOID SOCKET (Part No. HD-48498-A), tighten to 13-17 ft-lbs (17.6-23.0 Nm).
6. Route the wire harness between the cylinders.
7. Install rocker box and rocker cover. See 3.10 TOP END SERVICE.
8. Connect the ACR connectors [203R] and [203F] to the main wiring harness. Secure connectors to retaining clip.

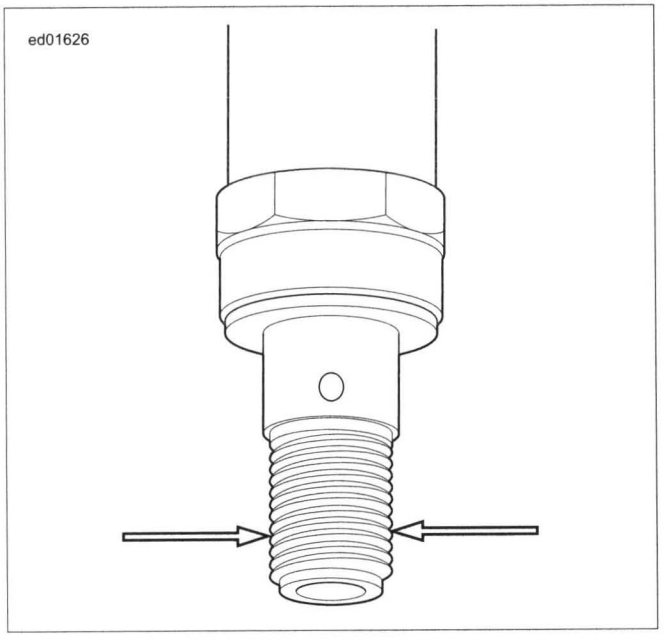

Figure 7-58. Bottom Third

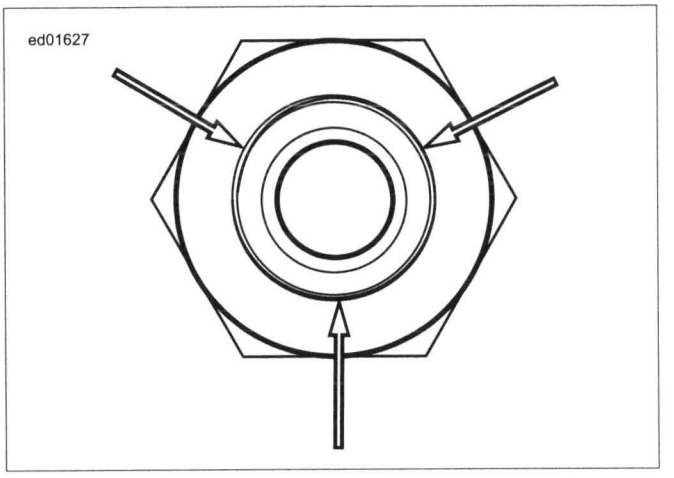

Figure 7-59. Three Dots of LOCTITE 246 MEDIUM STRENGTH/HIGH TEMPERATURE THREADLOCKER (blue)

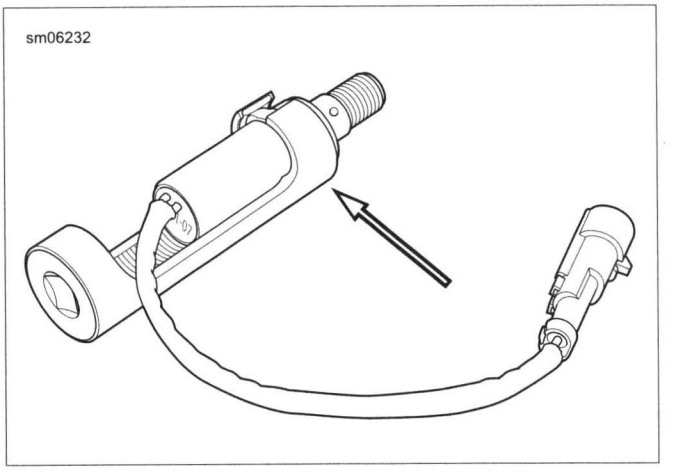

Figure 7-60. ACR Solenoid Socket and ACR

REMOVAL

⚠WARNING

To prevent accidental vehicle start-up, which could cause death or serious injury, disconnect negative (-) battery cable before proceeding. (00048a)

NOTES

- *The voltage regulator cannot be repaired. Replace assembly upon failure.*
- *Record wire routing and cable strap locations before removal.*

1. Disconnect negative battery cable.
2. See Figure 7-61. Release latches (1) from each connector.
3. Disconnect stator connector (3) and regulator output connector (2).
4. Remove regulator fasteners (4).

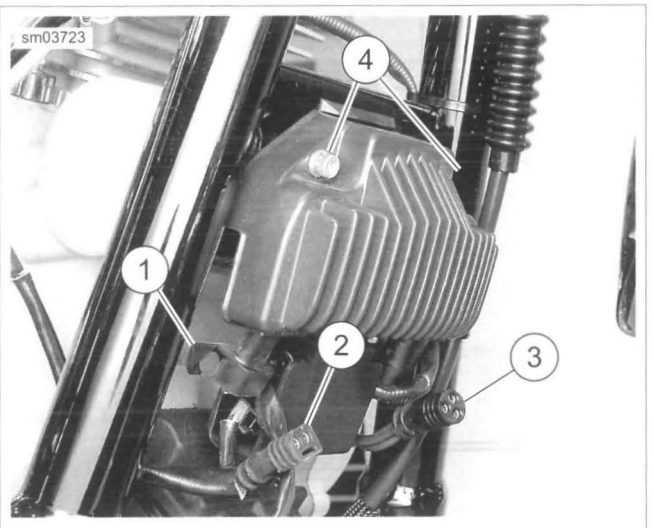

1. **Connector latch (2)**
2. **Regulator output connector**
3. **Stator connector**
4. **Regulator fastener (2)**

Figure 7-61. Voltage Regulator

INSTALLATION

FASTENER	TORQUE VALUE	
Voltage regulator fasteners	100-120 **in-lbs**	11.2-13.6 Nm

1. See Figure 7-61. Install voltage regulator with regulator fasteners (4). Tighten to 100-120 **in-lbs** (11.2-13.6 Nm).
2. Connect regulator output connector (2).
3. Connect stator connector (3).
4. Secure latches (1) on both connectors.
5. Connect negative battery cable.

REMOVAL

⚠WARNING

To prevent accidental vehicle start-up, which could cause death or serious injury, disconnect negative (-) battery cable before proceeding. (00048a)

1. Disconnect negative battery cable.
2. Remove primary chaincase housing. See 5.5 PRIMARY CHAINCASE HOUSING.
3. Disconnect stator connector from voltage regulator. See 7.17 VOLTAGE REGULATOR.

NOTE

Never pry rotor to remove or use sharp tools through holes in rotor face. Damage to stator wires is likely requiring replacement of stator.

4. See Figure 7-62. Remove alternator rotor (4). Two bolts can be inserted through the holes in the rotor face to aid removal.
   a. Clean lubricant from rotor shell.
   b. Using mechanics gloves, grasp and pull rotor to remove.

NOTE

See Figure 7-62. Lubricate parts with glass cleaner or isopropyl alcohol.

5. Move grommet (3) to one side and spray lubricant into gap to lubricate grommet and ease removal. Repeat previous step on opposite side.
6. Remove screws (2) and discard.
7. Remove stator (1) while pulling rubber grommet (3) and wires through crankcase hole.

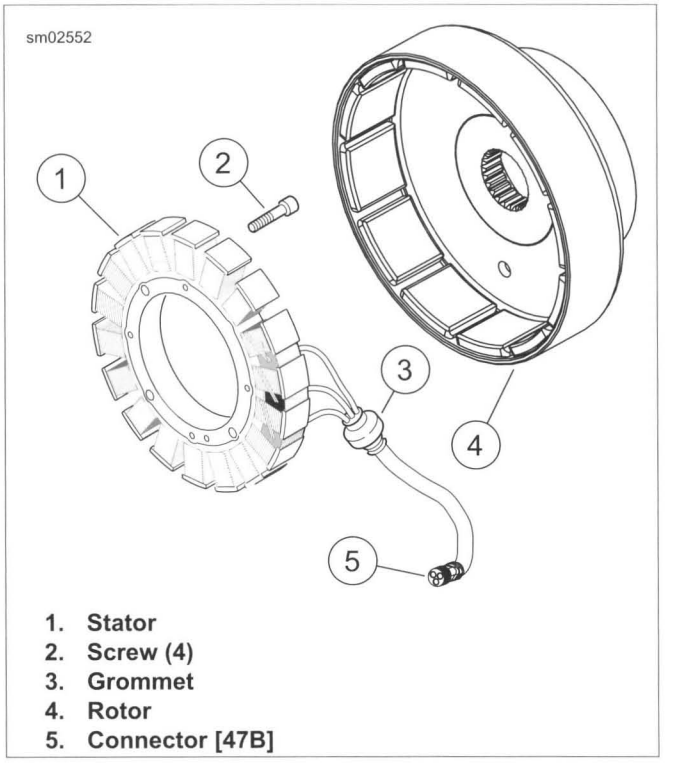

1. **Stator**
2. **Screw (4)**
3. **Grommet**
4. **Rotor**
5. **Connector [47B]**

Figure 7-62. Rotor and Stator (Typical)

CLEANING AND INSPECTION

1. Remove debris from rotor magnets. Clean rotor by wiping thoroughly with a clean cloth.
2. Check rotor for:
   a. Loose or cracked magnets.
   b. Stator bolt contact with rotor.
   c. Spline damage to rotor center mounting bolt hole.
3. Clean stator, stator leads and grommet thoroughly with a clean cloth.
4. Check stator for:
   a. Contact with rotor.
   b. Damaged or cracked insulation.
   c. Electrical failures. See the electrical diagnostic manual.

INSTALLATION

FASTENER	TORQUE VALUE	
Stator screws	55-75 **in-lbs**	6.2-8.4 Nm

NOTE

Discard and replace stator screws after each removal.

1. Insert wires through crankcase hole.
2. See Figure 7-62. Push rubber grommet (3) with wires through crankcase hole. If necessary, apply the same lubricant used during removal.

3. Install the stator (1) on the crankcase and fasten in place using **new** screws (2). Tighten to 55-75 **in-lbs** (6.2-8.4 Nm).
4. Connect connector [47] (5) onto voltage regulator and engage latch to secure. See 7.17 VOLTAGE REGULATOR.
5. Install rotor (4) on the sprocket shaft.
6. Install primary chaincase housing, clutch, primary drive and primary cover. See 5.5 PRIMARY CHAINCASE HOUSING and 5.4 DRIVE COMPONENTS.
7. Connect negative battery cable.

GENERAL

If replacing gauge, remove wires from back of gauge.

The fuel gauge sending unit is in the fuel tank. See 7.20 FUEL GAUGE SENDER

REMOVAL

⚠WARNING

Stop the engine when refueling or servicing the fuel system. Do not smoke or allow open flame or sparks near gasoline. Gasoline is extremely flammable and highly explosive, which could result in death or serious injury. (00002a)

⚠WARNING

To prevent accidental vehicle start-up, which could cause death or serious injury, disconnect negative (-) battery cable before proceeding. (00048a)

NOTE

The gauge wires are routed through a tube in the tank. Wires are secured by a cable strap located in the top frame tube underneath the fuel tank.

1. Disconnect negative battery cable.
2. Loosen fuel tank to gain access to the fuel gauge connector. See 4.4 FUEL TANK.
3. Disconnect fuel gauge connector [117] located under left side of fuel tank.
4. See Figure 7-63. Detach terminals from connector (4).

NOTE

Do not twist gauge and wiring during removal.

5. Pull up on gauge (1). Remove gauge, gasket (2) and wiring harness (3) from fuel tank. Discard gasket.

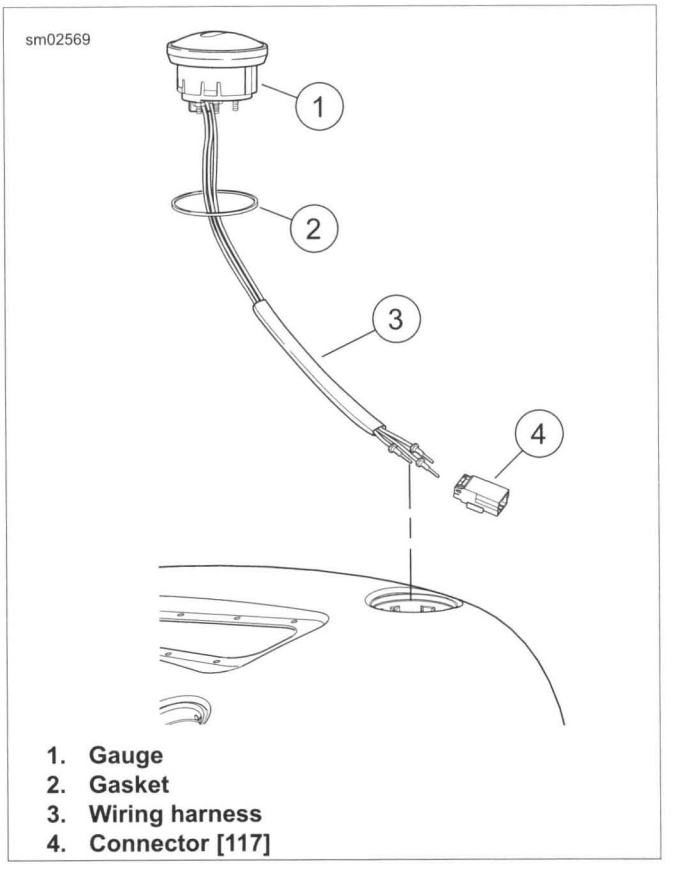

1. **Gauge**
2. **Gasket**
3. **Wiring harness**
4. **Connector [117]**

Figure 7-63. Fuel Gauge

REMOVAL

⚠WARNING

Stop the engine when refueling or servicing the fuel system. Do not smoke or allow open flame or sparks near gasoline. Gasoline is extremely flammable and highly explosive, which could result in death or serious injury. (00002a)

⚠WARNING

To prevent accidental vehicle start-up, which could cause death or serious injury, disconnect negative (-) battery cable before proceeding. (00048a)

1. Disconnect negative battery cable.
2. Drain fuel into adequately sized, approved gasoline container.
3. Remove instrument console.
   a. **For FXDF and FLD models:** See 7.21 INSTRUMENTS: FXDF AND FLD.
   b. **For FXDB, FXDBC, FXDBP and FXDWG models:** See 7.22 INSTRUMENTS: FXDB, FXDBC, FXDBP AND FXDWG.
   c. **FXDL models:** See 7.23 INSTRUMENTS: FXDL.
4. Disconnect console wiring.
5. See Figure 7-65. Disconnect fuel pump and sender connector (1) [141].
6. Remove vent hose (3).
7. Remove top plate screws (2) and discard.

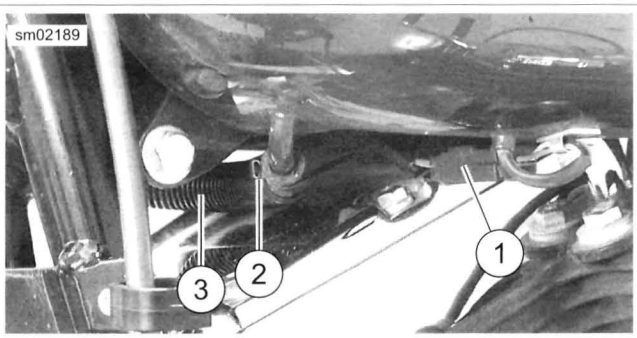

1. **Fuel gauge connector [117]**
2. **Clamp**
3. **Crossover hose**

Figure 7-64. Fuel Gauge Connector and Crossover Hose

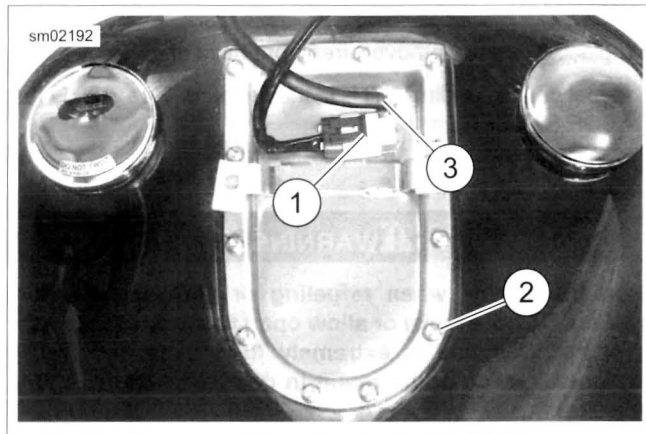

1. **Fuel pump and sender connector [141]**
2. **Screws (12)**
3. **Vent hose**

Figure 7-65. Top Plate Screws (Typical)

8. See Figure 7-66. Rotate top plate (3) until vent tube (1) clears fuel tank.
9. See Figure 7-67. Press tab and remove fuel pump/sender wiring from top plate. Remove top plate.
10. Disconnect wire harness from fuel pump.
11. See Figure 7-68. Pull removal tab (2) toward rear of vehicle to disengage fuel gauge sender (1) from mounting tabs.

NOTE

Do not bend float arm while removing. A bent float arm gives inaccurate readings.

12. Remove fuel gauge sender from fuel tank.

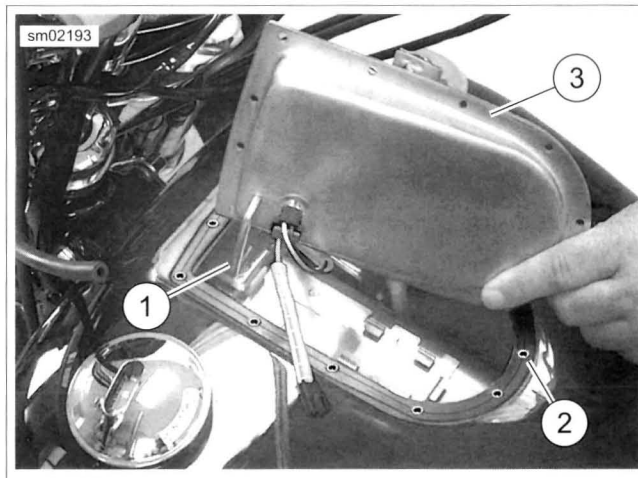

1. **Vent tube**
2. **Gasket**
3. **Top plate**

Figure 7-66. Top Plate

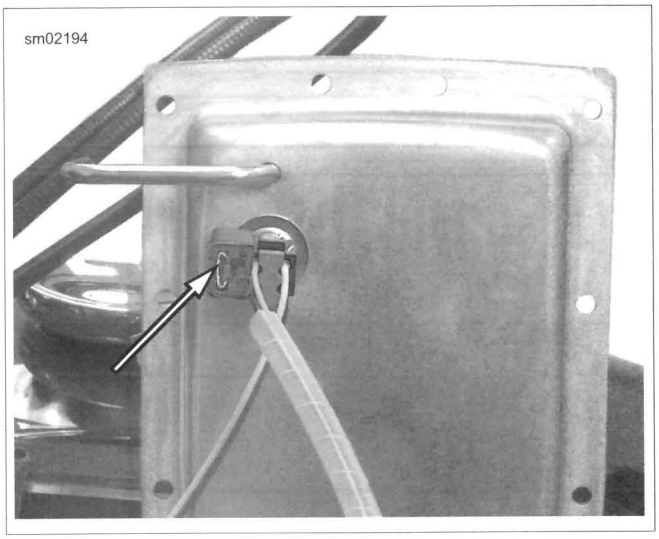

Figure 7-67. Connector Tab

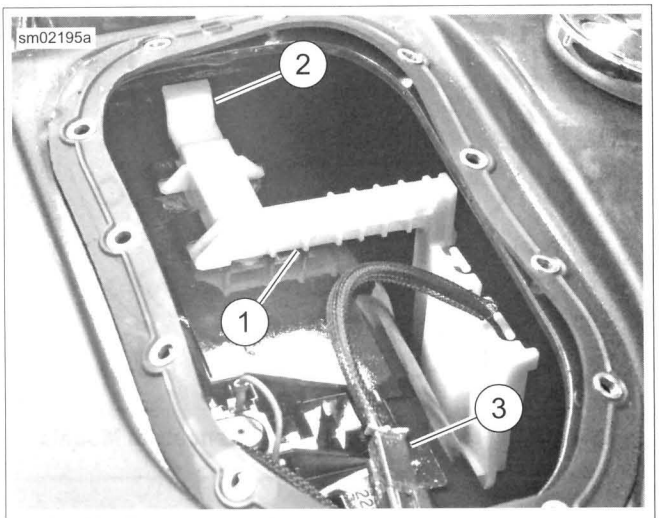

1. **Fuel gauge sender**
2. **Removal tab**
3. **Connector**

Figure 7-68. Fuel Gauge Sender

INSTALLATION

FASTENER	TORQUE VALUE	
Top plate fasteners	27-33 **in-lbs**	3.1-3.7 Nm

1. See Figure 7-68. Install fuel gauge sender (1), making sure that removal tab (2) is locked in place.
2. Attach connector (3) to wiring harness.

NOTE

Do not apply any type of sealant to gasket.

3. See Figure 7-69. Place **new** gasket (2) under top plate. Align gasket with screw holes.
4. Install fuel pump/sender wire connector (4) on top plate (3).
5. Hold top plate at 90 degree angle. Making sure that vent tube is installed inside of tank, rotate top plate into position.
6. Loosely install **new** sealing screws in top plate.

NOTE

All models use the same torque sequence despite shape differences in top plate.

7. See Figure 7-71. Tighten sealing fasteners using pattern shown to 27-33 **in-lbs** (3.1-3.7 Nm).
8. See Figure 7-70. Connect fuel pump/sending unit connector [141] (1).
9. Install instrument console.
   a. **For FXDF and FLD models:** See 7.21 INSTRUMENTS: FXDF AND FLD.
   b. **For FXDB, FXDBC, FXDBP and FXDWG models:** See 7.22 INSTRUMENTS: FXDB, FXDBC, FXDBP AND FXDWG.
   c. **FXDL models:** See 7.23 INSTRUMENTS: FXDL.

NOTE

In next step, make sure crimped end of clamp faces toward front of vehicle.

10. Connect fuel tank cross-over hose with **new** clamps.
11. Connect negative battery cable.
12. Fill fuel tank.
13. Check fuel tank for leaks.

NOTE

The low fuel lamp will not turn off until there is sufficient fuel in the tank, the ignition switch has been turned off and back on, and the vehicle has begun forward movement.

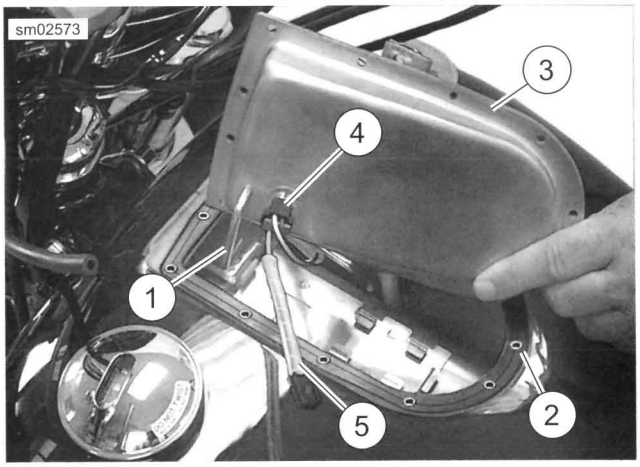

1. **Vent tube**
2. **Gasket**
3. **Top plate**
4. **Fuel pump/sender wire connector**
5. **Fuel pump harness**

Figure 7-69. Top Plate

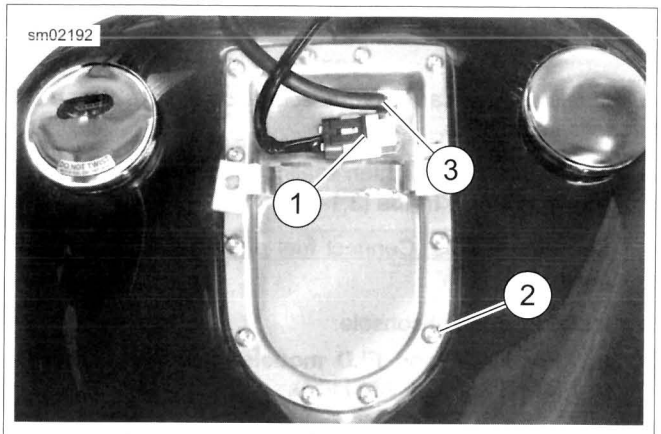

1. Fuel pump and sender connector [141]
2. Screws (12)
3. Vent hose

Figure 7-70. Top Plate Screws (Typical)

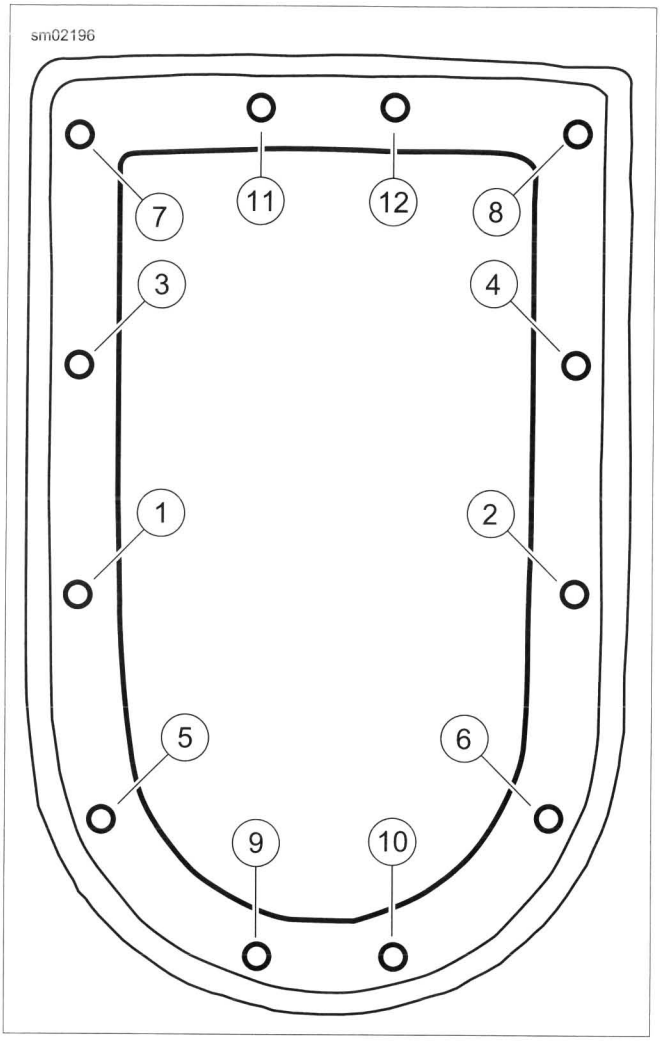

Figure 7-71. Top Plate Torque Sequence: All Models

SPEEDOMETER

FASTENER	TORQUE VALUE	
Console mounting screws: FXDF, FLD	41-49 **in-lbs**	4.6-5.5 Nm
Fuel tank trim screw: FXDF, FLD	18-24 **in-lbs**	2.03-2.71 Nm

Removal

NOTES

- *Both the ECM and the speedometer retain the odometer value. If the speedometer is replaced, the **new** speedometer displays the odometer value stored in the ECM. The **new** speedometer will lock to the mileage stored in the ECM after 31.1 mi (50 km) have been accumulated. The trip B odometer displays the count down mileage.*
- *If the speedometer is installed on another vehicle, after it has locked to the ECM, the odometer will display "VIN ERR" on the new vehicle.*
- *If the speedometer is removed from the vehicle before the count down reaches zero, it will reset the mileage count down 31.1 mi (50 km). This mileage count down allows for a road test to verify that speedometer replacement was the proper repair.*
- *Use glass cleaner to lubricate speedometer during removal and installation.*

1. See Figure 7-72. Remove screw (2) securing trim to fuel tank. Remove screws (3) securing console to top plate.

NOTE

Two push nuts secure trim to console.

2. Position clean towel on fuel tank and flip console over to expose underside.
3. Press connector tab and disconnect 12-place harness connector [39] from speedometer (5) under console.
4. Pry between three tabs and speedometer with a screwdriver to raise and release back clamp (7) from speedometer. Remove back clamp from speedometer.
5. Remove speedometer from console (6).
6. Remove gasket (4) from speedometer.

Installation

1. See Figure 7-72. Install gasket (4) to speedometer (5).
2. Position speedometer in console (6).
3. Press back clamp (7) until three tabs engage on back of speedometer.
4. Connect 12-place connector [39] to speedometer under console.

NOTE

Two push nuts secure trim to console.

5. Install console to fuel tank with screws (3). Tighten to 41-49 **in-lbs** (4.6-5.5 Nm).
6. Install screw (2) securing fuel tank trim (1) to fuel tank. Tighten to 18-24 **in-lbs** (2.03-2.71 Nm).
7. Test speedometer for proper operation.

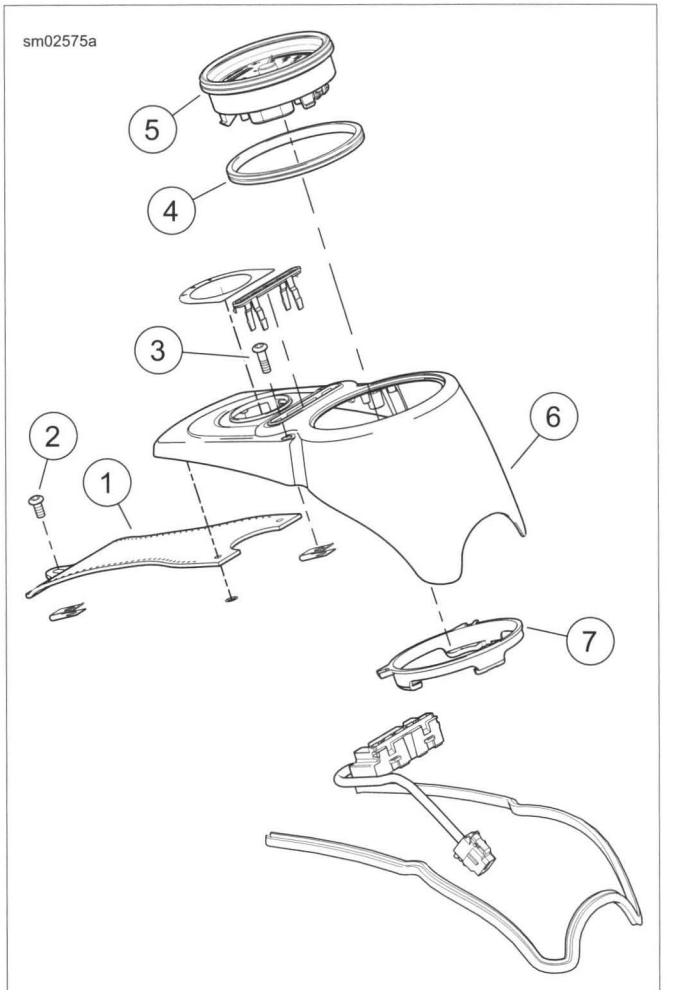

1. **Trim**
2. **Screw**
3. **Screw (2)**
4. **Gasket**
5. **Speedometer**
6. **Console**
7. **Back clamp**

Figure 7-72. Speedometer: FXDF, FLD

REMOVAL

NOTES

- *Both the ECM and the speedometer retain the odometer value. If the speedometer is replaced, the* ***new*** *speedometer displays the odometer value stored in the ECM. The* ***new*** *speedometer will lock to the mileage stored in the ECM after 31.1 mi (50 km) have been accumulated. The trip B odometer displays the count down mileage.*
- *If the speedometer is installed on another vehicle, after it has locked to the ECM, the odometer will display "VIN ERR" on the new vehicle.*
- *If the speedometer is removed from the vehicle before the count down reaches zero, it resets the mileage count down to 31.1 mi (50 km). This mileage count down allows for a road test to verify that speedometer replacement was the proper repair.*
- *Do not cut any of the wiring harness cable straps to replace the speedometer. Lubricate speedometer gasket with glass cleaner or isopropyl alcohol for removal and installation.*

1. See Figure 7-73. Remove screws (4, 5).
2. Lift console from fuel tank.
3. Position clean towel on fuel tank and flip console over to expose underside.
4. Remove screws (1) and back clamp (10).
5. While pressing connector tab, remove speedometer connector (8) from back of speedometer (7).
6. Remove speedometer from console. Remove gasket (6) from speedometer/console.

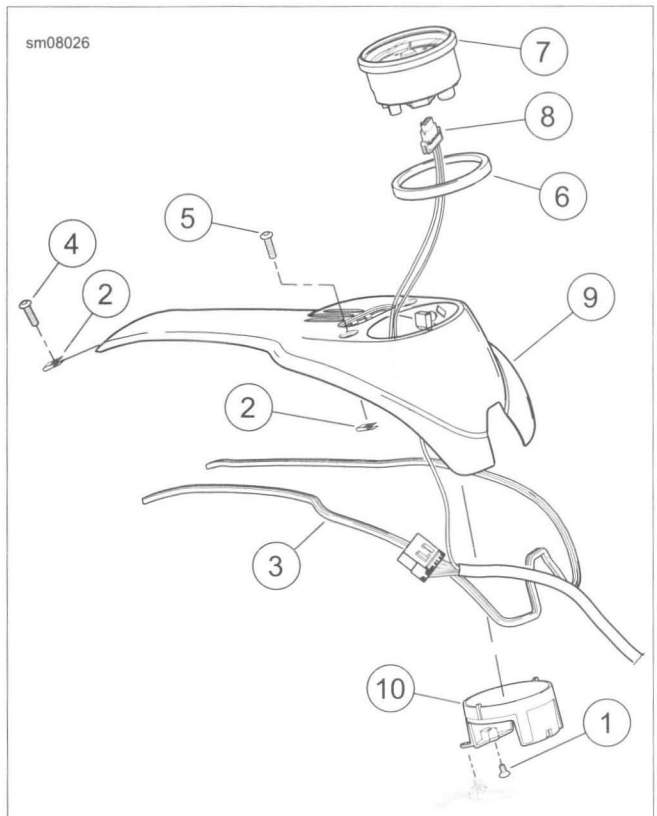

1. **Screw**
2. **Speed nut**
3. **Console trim**
4. **Screw**
5. **Screw (2)**
6. **Gasket**
7. **Speedometer**
8. **Speedometer connector**
9. **Console**
10. **Back clamp**

Figure 7-73. Speedometer: FXDB, FXDBC, FXDBP, FXDWG

INSTALLATION

FASTENER	TORQUE VALUE	
Speedometer screw: FXDB, FXDBC, FXDBP and FXDWG	10-20 **in-lbs**	1.1-2.3 Nm
Console to fuel tank fasteners: FXDB, FXDBC, FXDBP and FXDWG	41-49 **in-lbs**	4.6-5.5 Nm

NOTE

Lubricate gasket with alcohol or glass cleaner.

1. See Figure 7-73. Install console trim (3) to console (9).
2. Install gasket (6) on speedometer (7).
3. Install speedometer in console.

4. Install back clamp (10) to speedometer with screw (1). Tighten to 10-20 **in-lbs** (1.1-2.3 Nm). Make sure that there is no binding with the wiring harnesses and the bracket.
5. Install speedometer connector (8) to back of speedometer.
6. Install console to fuel tank with screws (4, 5). Tighten to 41-49 **in-lbs** (4.6-5.5 Nm).
7. Test speedometer for proper operation.

REMOVAL

NOTES

- *Both the ECM and the speedometer retain the odometer value. If the speedometer is replaced, the* ***new*** *speedometer displays the odometer value stored in the ECM. The* ***new*** *speedometer will lock to the mileage stored in the ECM after 31.1 mi (50 km) have been accumulated. The trip B odometer displays the count down mileage.*
- *If the speedometer is installed on another vehicle, after it has locked to the ECM, the odometer will display "VIN ERR" on the new vehicle.*
- *If the speedometer is removed from the vehicle before the count down reaches zero, it resets the mileage count down to 31.1 mi (50 km). This mileage count down allows for a road test to verify that speedometer replacement was the proper repair.*
- *Do not cut any of the wiring harness cable straps to replace the speedometer. Lubricate speedometer gasket with glass cleaner or isopropyl alcohol for removal and installation.*

1. See Figure 7-74. Remove screws (6, 7). Lift console (11) from fuel tank.
2. Position clean towel on fuel tank and flip console over to expose underside.
3. Remove screws (1) and back clamp (2).
4. While pressing connector tab, remove speedometer connector from back of speedometer (10).
5. While pressing connector tab, remove speedometer connector from back of tachometer (9).
6. Remove speedometer from console. Remove gaskets (8).

INSTALLATION

FASTENER	TORQUE VALUE	
Console back clamp screw	10-20 **in-lbs**	1.1-2.3 Nm
Console to fuel tank fasteners: FXDL	41-49 **in-lbs**	4.6-5.5 Nm

NOTE

Lubricate gaskets with alcohol or glass cleaner.

1. See Figure 7-74. Install console trim (3) to console (11).
2. Install gaskets (8) on speedometer (10) and tachometer.
3. Install speedometer in console.
4. Install tachometer in console.
5. Install back clamp (2) to speedometer and tachometer with screw (1). Tighten to 10-20 **in-lbs** (1.1-2.3 Nm). Make sure that there is no binding with the wiring harnesses and the bracket.
6. Install speedometer connector to back of speedometer.
7. Install tachometer connector to back of speedometer.
8. Install console to fuel tank with screws (6, 7). Tighten to 41-49 **in-lbs** (4.6-5.5 Nm).
9. Test instruments for proper operation.

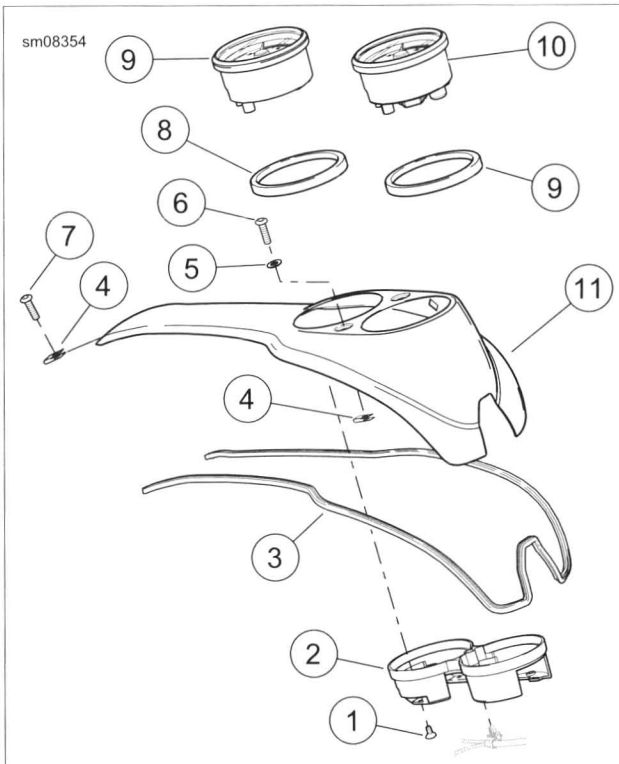

1. **Screw (4)**
2. **Back clamp**
3. **Console trim**
4. **Speed nut (3)**
5. **Washer**
6. **Screw (2)**
7. **Screw**
8. **Gasket**
9. **Tachometer**
10. **Speedometer**
11. **Console**

Figure 7-74. Speedometer: FXDL

GENERAL

The VSS is a Hall Effect sensor that takes readings off fourth gear in the transmission.

The VSS is on the transmission just behind the transmission top cover.

REMOVAL

⚠WARNING

To prevent accidental vehicle start-up, which could cause death or serious injury, disconnect negative (-) battery cable before proceeding. (00048a)

NOTE

*Before removing VSS wire, carefully note wire routing. Lay the **new** VSS wire next to the old wire. Remove and replace the wires together, one cable strap at a time, to verify proper routing.*

1. Disconnect negative battery cable.
2. See Figure 7-75. Disconnect the VSS connector [65].
3. Remove VSS mounting bolt.
4. Remove sensor from transmission case.

INSTALLATION

FASTENER	TORQUE VALUE	
Speedometer VSS mounting bolt	84-108 **in-lbs**	9.5-12.2 Nm

1. See Figure 7-75. Install VSS into transmission case using mounting bolt. Tighten to 84-108 **in-lbs** (9.5-12.2 Nm).
2. Install connector [65] to VSS.
3. Connect battery cables.

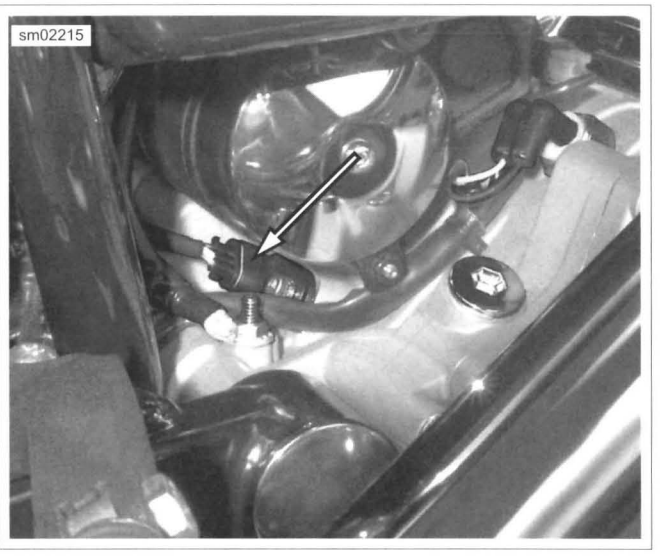

Figure 7-75. VSS Connector [65]

FRONT WHEEL SPEED SENSOR (WSS)

Removal

NOTE

WSS harness and connector are routed through the plastic clip in the steering head and then the hole on right hand side of steering head.

1. Remove fuel tank. See 4.4 FUEL TANK.
2. See Figure 7-76. Disconnect front WSS connector (6).
3. Cut cable straps (5) to release front WSS cable from brake hose.
4. Remove front WSS clip (1).
5. Retract axle until WSS (3) is free. See 2.4 FRONT WHEEL.

NOTE

The WSS works with the ABS encoder bearing installed in the wheel hub. If necessary, see 2.6 SEALED WHEEL BEARINGS for removal and installation instructions.

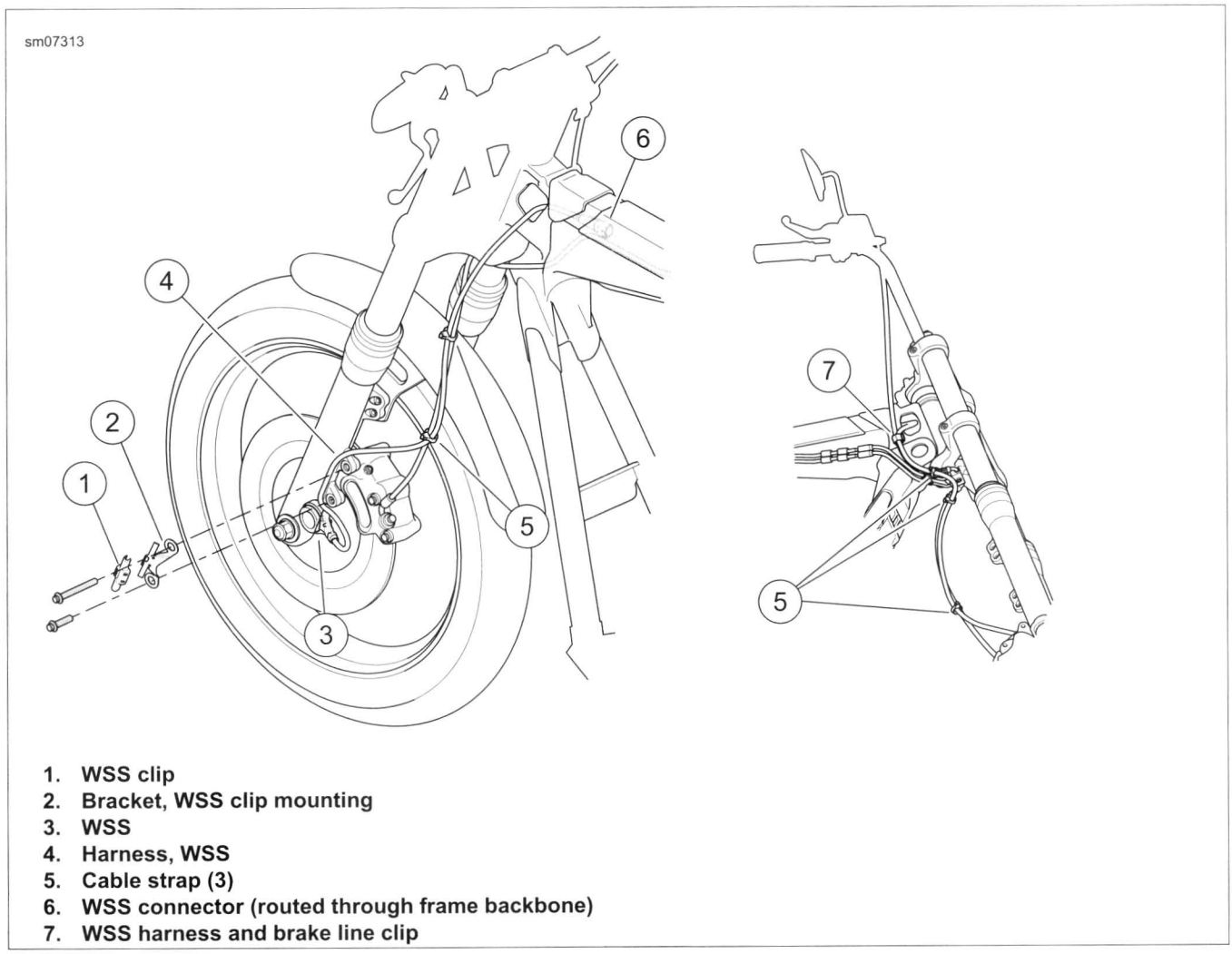

1. **WSS clip**
2. **Bracket, WSS clip mounting**
3. **WSS**
4. **Harness, WSS**
5. **Cable strap (3)**
6. **WSS connector (routed through frame backbone)**
7. **WSS harness and brake line clip**

Figure 7-76. Front Wheel Speed Sensor and Connector

Installation

NOTES

- *Keep WSS away from magnetic fields (magnetic parts trays, magnetic base dial indicators, alternator rotors and so on).*
- *Never pull WSS cable taut or use to retain wheel, axle or other components.*
- *See Figure 7-77. Install WSS with index pin on the outboard side and rotate until index pin contacts shoulder on fork slider.*

1. Push axle through **new** front WSS and left fork slider and secure. See 2.4 FRONT WHEEL.
2. See Figure 7-76. Route WSS wire and brake line through WSS harness and brake line clip (7).
3. Connect front WSS connector (6).

NOTE

See Figure 7-76. Cable straps (5) must be located at white stripe on brake line and approximately 1 in (25 mm) below connection at manifold.

4. Install three **new** cable straps (5) to secure front wheel speed sensor cable to brake hose.
5. Install WSS clip (1).
6. Install fuel tank. See 4.4 FUEL TANK.



Figure 7-77. Front Wheel Speed Sensor Index Pin (ABS Models)

REAR WHEEL SPEED SENSOR (WSS)

Removal

NOTE

The wheel speed sensor (WSS) is installed between the rear wheel hub and brake caliper bracket assembly.

1. **FLD models:** Remove right saddlebag. See 2.34 SADDLEBAGS: FLD.
2. Remove seat.
3. Remove battery and battery tray. See 1.18 BATTERY MAINTENANCE and 7.10 BATTERY TRAY AND BATTERY CABLES.
4. **Active exhaust:** Remove active exhaust cable. See 7.31 ACTIVE EXHAUST: HDI.
5. See Figure 7-78. Disconnect WSS connector (3).
6. Remove cable straps (2).
7. Remove cable strap securing WSS harness to brake line under the battery tray.
8. Remove axle to free WSS. See 2.5 REAR WHEEL.

NOTE

The WSS works with ABS encoder bearing installed in wheel hub. If necessary, see 2.6 SEALED WHEEL BEARINGS for removal and installation instructions.

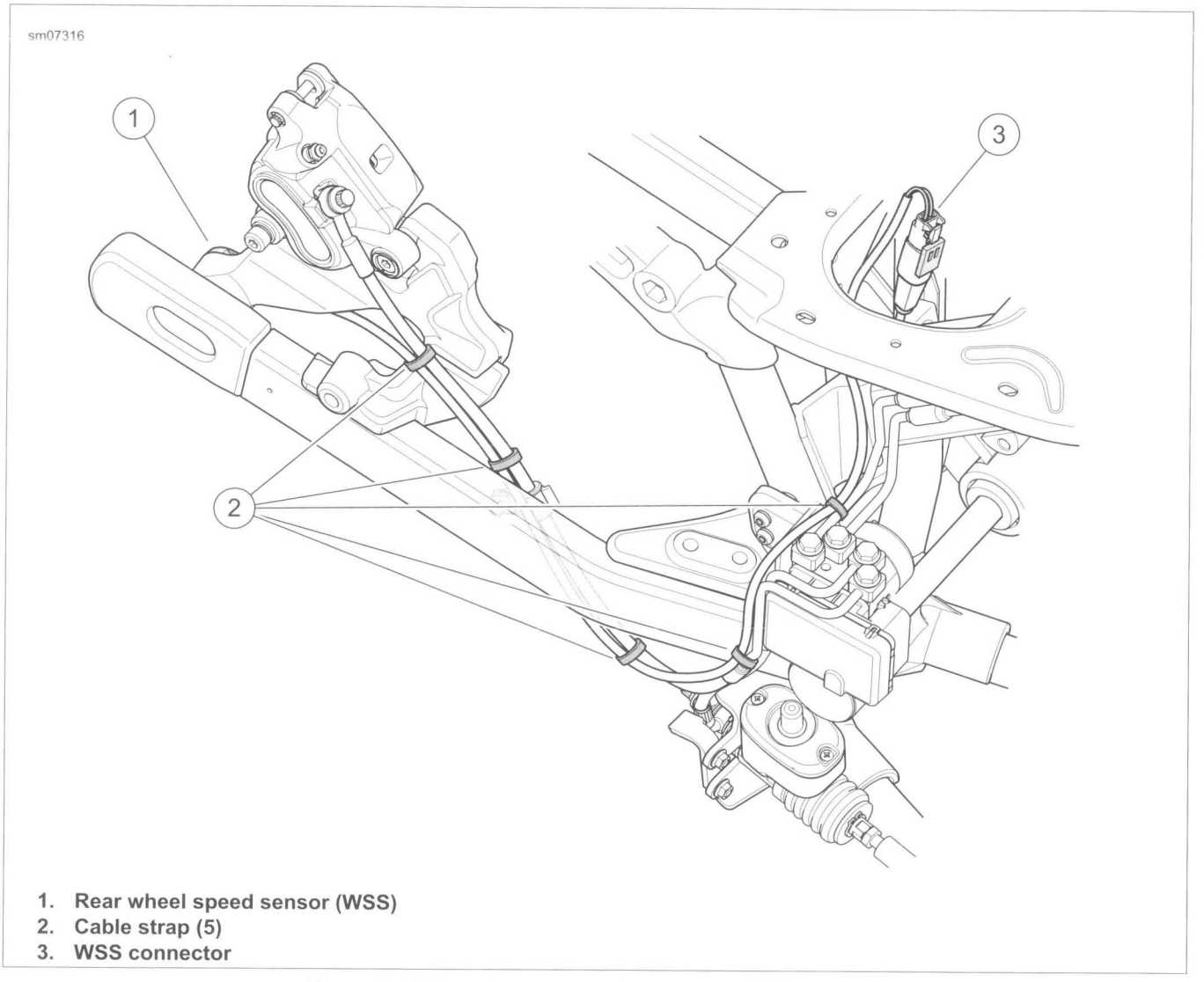

1. **Rear wheel speed sensor (WSS)**
2. **Cable strap (5)**
3. **WSS connector**

Figure 7-78. Rear Wheel Speed Sensor and Cable Routing

Installation

NOTES

- *Always keep the WSS away from magnetic fields (such as magnetic parts trays, magnetic base dial indicators and alternator rotors) or damage occurs. Never pull WSS cable taut or use to retain wheel, axle or other components.*
- *Install WSS with index pin on the outboard side to prevent sensor damage during installation.*

1. See 2.5 REAR WHEEL and Figure 7-79. Install axle with **new** rear WSS in place. Make sure that index pin is pointed outboard toward rear fork. Rotate WSS so index pin is against lower edge of rear caliper mounting bracket.
2. See Figure 7-78. Secure WSS cable to brake line at locations shown using cable straps (2).
3. Connect rear WSS connector (3).
4. Install a cable strap to secure the WSS harness to the brake line under the battery tray.
5. **Active exhaust:** Install active exhaust cable. See 7.31 ACTIVE EXHAUST: HDI.
6. Install battery tray and battery. See 7.10 BATTERY TRAY AND BATTERY CABLES and 1.18 BATTERY MAINTENANCE.

⚠WARNING

After installing seat, pull upward on seat to be sure it is locked in position. While riding, a loose seat can shift causing loss of control, which could result in death or serious injury. (00070b)

7. Install seat.
8. **FLD models:** Install right saddlebag. See 2.34 SADDLEBAGS: FLD.

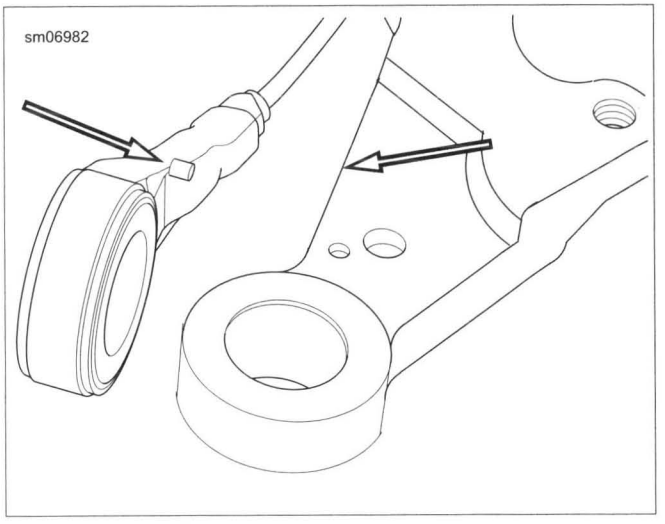

Figure 7-79. Rear Wheel Speed Sensor Index Pin (ABS Models)

REMOVAL

FLD

1. See Figure 7-80. Remove screws (2) and raise console (4) from fuel tank. Place shop rags on tank and turn console over to expose underside.
2. Squeeze clips (3) of bezel to free from tabs (6) on LED assembly with harness (5). Pry LED assembly with a screwdriver to remove.
3. Disconnect harness from speedometer, fuel tank, ignition switch and main harness. Remove harness and LED assembly.

FXDB, FXDBC, FXDBP, FXDWG and FXDF

1. See Figure 7-81. Remove console screws (4).
2. Raise console (2) from fuel tank. Place shop rags on tank and turn console over to expose underside.
3. Release clips (3) to free LED assembly with harness (5) from console.
4. Disconnect harness from speedometer, fuel tank, ignition switch and main harness. Remove harness and indicator lamp assembly.

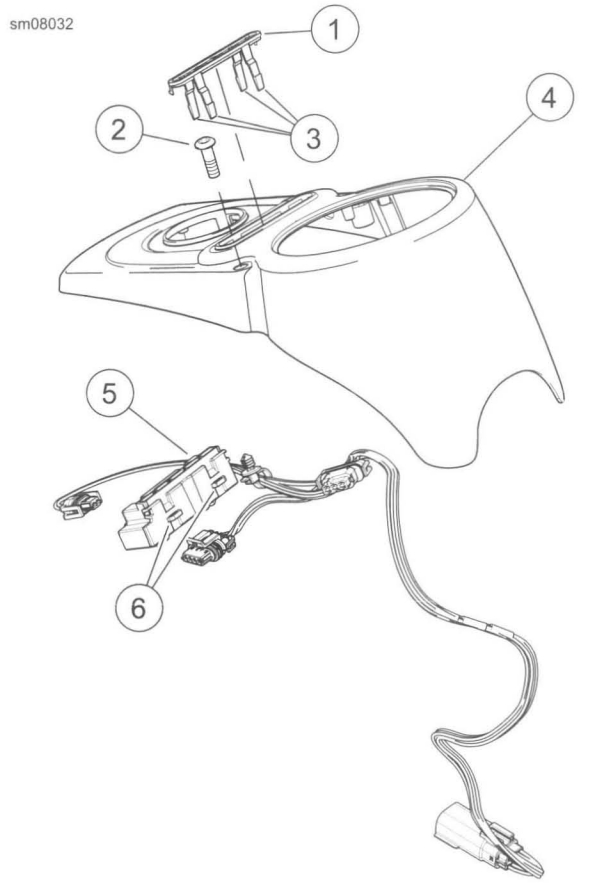

1. **Bezel**
2. **Screw (2)**
3. **Clip (4)**
4. **Console**
5. **LED assembly with harness**
6. **Tab (4)**

Figure 7-80. Indicator Lamp Assembly: FLD

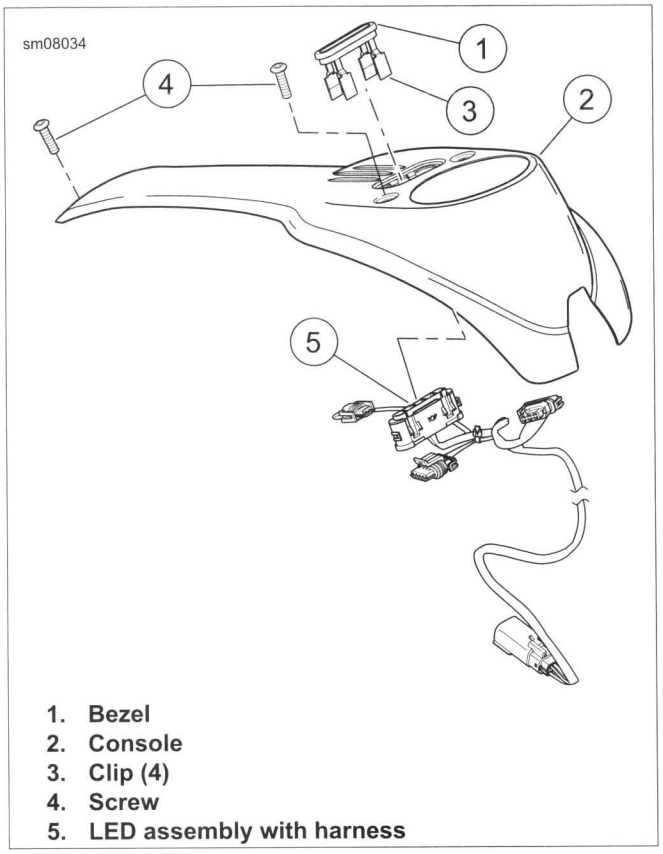

1. **Bezel**
2. **Console**
3. **Clip (4)**
4. **Screw**
5. **LED assembly with harness**

Figure 7-81. Indicator Lamp Assembly: FXDB, FXDBC, FXDBP, FXDWG and FXDF (typical)

Table 7-11. LED Assembly Wiring

INDICATOR LAMP	CONNECTION
Oil pressure	Ground through switch
Neutral	Ground through switch
High beam	12V when active
Right/left turn	12V when active

INSTALLATION

FASTENER	TORQUE VALUE	
Console mounting screws: FLD	41-49 **in-lbs**	4.6-5.5 Nm
Console mounting screws: FXDB, FXDBC, FXDBP, FXDWG and FXDF	41-49 **in-lbs**	4.6-5.5 Nm

FLD

1. See Figure 7-80. Install LED assembly into console. Make sure clips (3) engage to secure assembly in place.
2. Connect [20] to main wiring harness.
3. Install speedometer, fuel tank and ignition switch harness.
4. Secure console (4) in position with screws (2). Tighten to 41-49 **in-lbs** (4.6-5.5 Nm).

FXDB, FXDBC, FXDBP, FXDWG and FXDF

1. See Figure 7-81. Install LED assembly with harness (5) into console (2).
2. Engage clips (3) into tabs on LED assembly.
3. Install speedometer, fuel tank and ignition switch harness.
4. Connect [20] to main wiring harness.
5. Secure console (2) in position with screws (4). Tighten to 41-49 **in-lbs** (4.6-5.5 Nm).

GENERAL

The neutral switch is located on the transmission case. The two terminal switch is normally closed. When the transmission shifter is in neutral and the ignition switch is in the IGNITION position, the switch causes the NEUTRAL indicator light to illuminate.

REMOVAL

1. Place transmission in NEUTRAL.
2. See Figure 7-82. Remove two elbow connectors from neutral switch posts.
3. Remove neutral switch from transmission case.

INSTALLATION

FASTENER	TORQUE VALUE	
Neutral switch	120-180 **in-lbs**	13.6-20.3 Nm

1. See Figure 7-83. Inspect O-ring for damage. Replace as necessary. Lightly lubricate **new** O-ring with clean transmission oil before installation.
2. Verify that transmission is in NEUTRAL.
3. Install neutral switch in transmission case. Tighten to 120-180 **in-lbs** (13.6-20.3 Nm).

NOTE

The neutral switch is not polarity sensitive. Install connectors on either post.

4. Install both connectors onto neutral switch posts.
5. Verify proper operation of neutral switch.
   a. Turn ignition/light key switch to IGNITION.
   b. Verify that neutral indicator light illuminates.

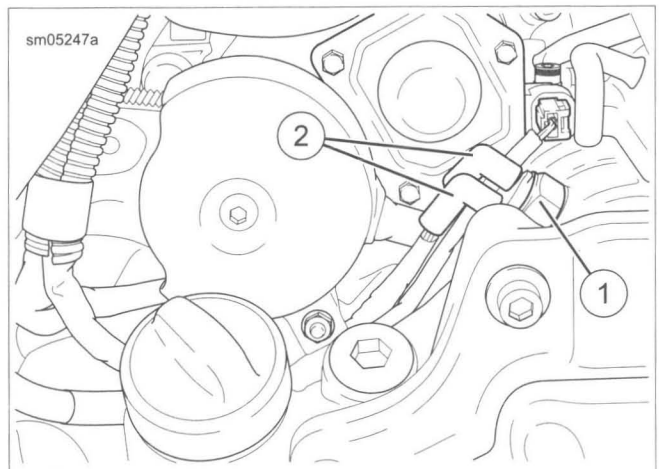

1. **Neutral switch**
2. **Elbow connector (2)**

Figure 7-82. Neutral Switch

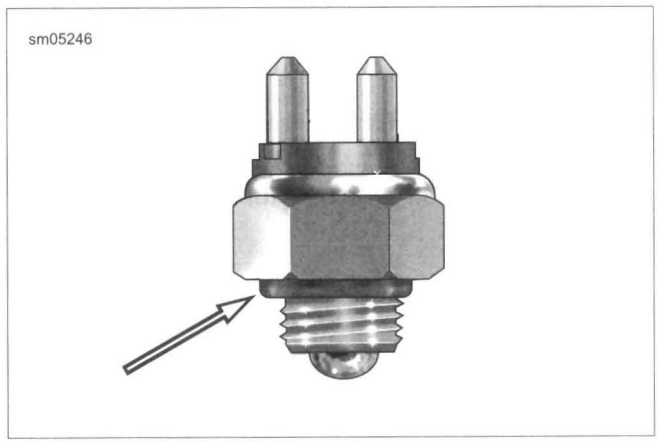

Figure 7-83. Neutral Switch O-Ring

GENERAL

The oil pressure switch monitors oil pressure in the crankcase. If the oil pressure drops below 3 psi (20.6 kPa) the oil pressure switch is tripped and illuminates the low oil pressure indicator light.

See Figure 7-84. The oil pressure switch is located on the right side of the crankcase.

REMOVAL

1. See Figure 7-84. Remove connector (2) from oil pressure switch (1).
2. Remove oil pressure switch from crankcase.

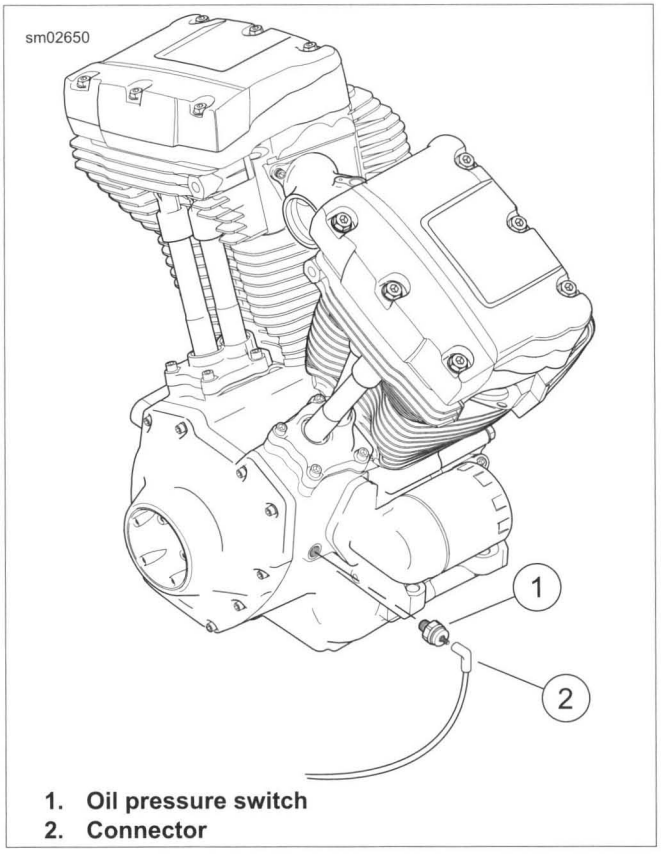

1. **Oil pressure switch**
2. **Connector**

Figure 7-84. Oil Pressure Switch

INSTALLATION

FASTENER	TORQUE VALUE	
Oil pressure switch	96-144 **in-lbs**	10.8-16.3 Nm

1. Coat threads of oil pressure switch with LOCTITE 565 THREAD SEALANT.
2. See Figure 7-84. Install oil pressure switch (1) to crankcase. Tighten to 96-144 **in-lbs** (10.8-16.3 Nm).
3. Attach connector (2) to oil pressure switch.
4. Test oil pressure switch for proper operation.

NOTE

If connector (2) requires replacement, see the electrical diagnostic manual.

GENERAL

See Figure 7-85. The rear stop lamp switch (1) monitors brake fluid pressure in the rear brake line. When pressure in the line reaches a preset level, the rear stop lamp switch is tripped and illuminates the tail light/stop lamp.

REMOVAL

NOTICE

D.O.T. 4 brake fluid will damage painted and body panel surfaces it comes in contact with. Always use caution and protect surfaces from spills whenever brake work is performed. Failure to comply can result in cosmetic damage. (00239b)

1. See Figure 7-85. Remove both connectors (2) from rear stop lamp switch (1).
2. Place a clean container under the rear stop lamp switch and brake line to catch escaping fluid.
3. Remove rear stop lamp switch.

INSTALLATION

FASTENER	TORQUE VALUE	
Rear stop lamp switch	12-15 ft-lbs	16.3-20.3 Nm

1. Coat threads of stop lamp switch with LOCTITE 565 THREAD SEALANT. Do not allow thread sealant to contact end of switch.
2. See Figure 7-85. Install rear stop lamp switch (1). Tighten to 12-15 ft-lbs (16.3-20.3 Nm).
3. Install switch connectors (2).

⚠WARNING

After repairing the brake system, test brakes at low speed. If brakes are not operating properly, testing at high speeds can cause loss of control, which could result in death or serious injury. (00289a)

4. Bleed brake system. See 2.16 BLEEDING BRAKES.

⚠WARNING

Be sure that all lights and switches operate properly before operating motorcycle. Low visibility of rider can result in death or serious injury. (00316a)

5. Check stop lamp for proper operation.

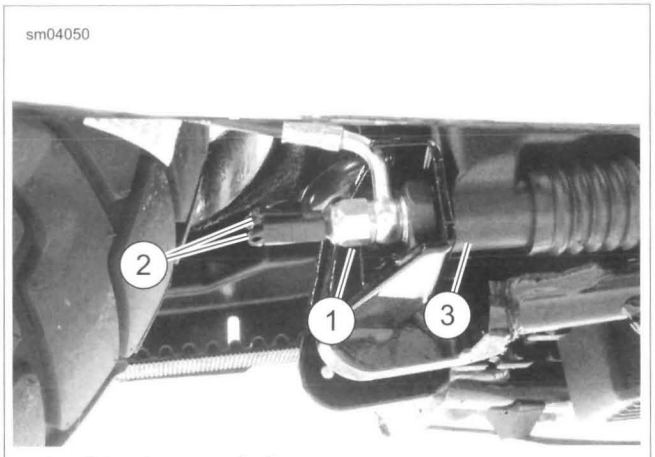

1. **Stop lamp switch**
2. **Connectors**
3. **Master cylinder**

Figure 7-85. Rear Stop Lamp Switch

INSPECTION

If the horn fails to sound or does not sound satisfactorily, check for loose, frayed or damaged wires leading to horn terminal, discharged battery or corroded ground.

The horn cannot be repaired or adjusted for tone. Only the mounting hardware is replaceable.

REPLACEMENT: ALL BUT FXDL

FASTENER	TORQUE VALUE	
Horn mounting nut	120-180 **in-lbs**	13.6-20.3 Nm

1. See Figure 7-86. Remove acorn nut (4) and washer (5) to detach horn bracket (6).
2. See Figure 7-87. Disconnect wires from posts (1, 2) on back side of horn.
3. See Figure 7-86. Remove screws (8) and nut (10) to detach horn from bracket. Remove wires from clamp (9).
4. Install **new** horn on bracket. Secure with screws (8), push nuts (3) and nut (10). Fold wires under clamp (9).
5. See Figure 7-87. Attach wiring.
   a. Connect Y/BK wire to gold post (1).
   b. Connect BK wire to silver post (2).

NOTE

When tightening fasteners, make sure that the horn does not contact the horn cover or other parts.

6. See Figure 7-86. Attach horn to vehicle using washer (5) and nut (4). Tighten to 120-180 **in-lbs** (13.6-20.3 Nm).

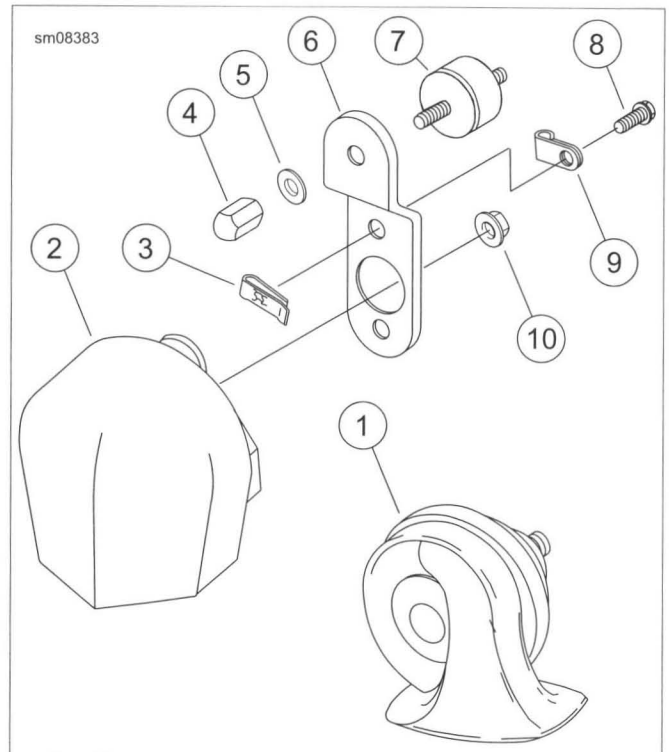

1. **Horn**
2. **Cover**
3. **Push nut (2)**
4. **Acorn nut**
5. **Washer**
6. **Bracket**
7. **Rubber mount**
8. **Screw (2)**
9. **Clamp**
10. **Nut**

Figure 7-86. Horn: All but FXDL

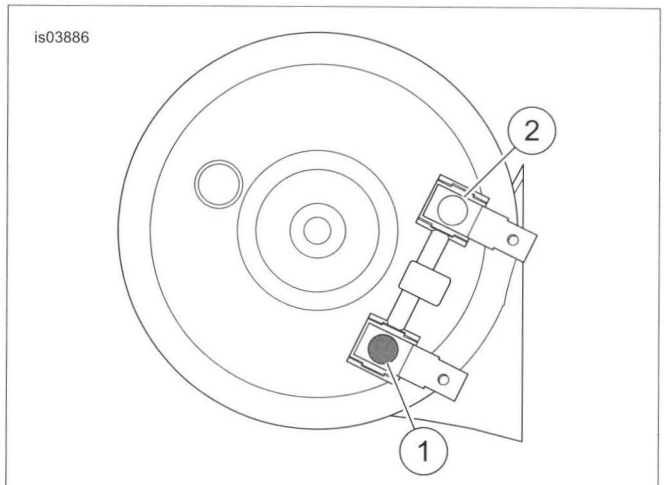

1. **Gold post and Y/BK wire**
2. **Silver post and BK wire**

Figure 7-87. Horn Wiring

REPLACEMENT: FXDL

FASTENER	TORQUE VALUE	
Horn mounting nut	80-100 **in-lbs**	9.0-11.3 Nm
Horn mount screw	13-15 ft-lbs	17.6-20.3 Nm

1. See Figure 7-88. Remove screw (5) and washer (4) to detach mount (3).
2. See Figure 7-87. Disconnect wires from posts (1, 2) on back side of horn.
3. See Figure 7-88. Remove nut (2) to detach horn from mount.
4. Install **new** horn on mount. Install nut. Tighten to 80-100 **in-lbs** (9.0-11.3 Nm)
5. See Figure 7-87. Attach wiring.
   a. Connect Y/BK wire to gold post (1).
   b. Connect BK wire to silver post (2).
6. See Figure 7-88. Attach horn mount using washer (4) and screw (5). Tighten to 13-15 ft-lbs (17.6-20.3 Nm).

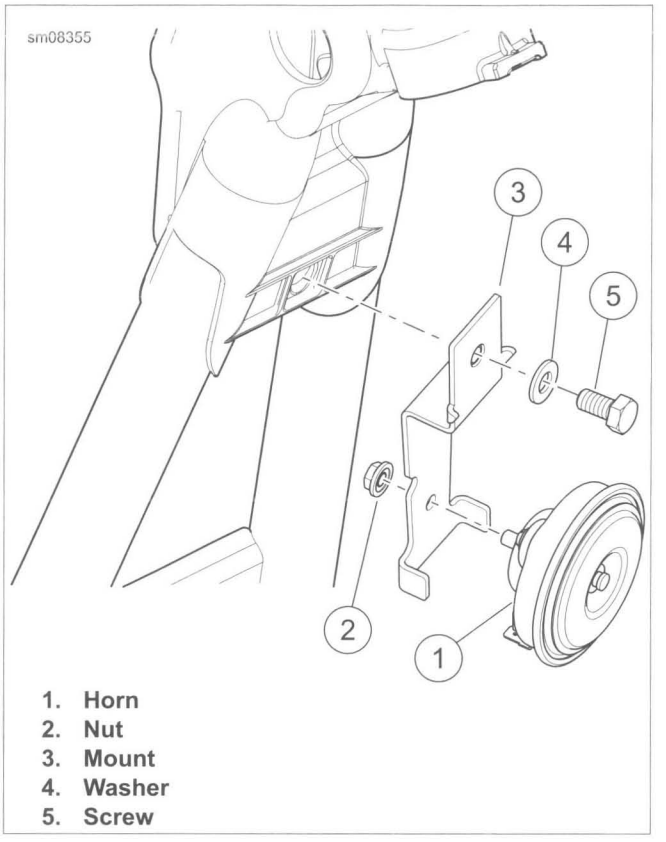

1. **Horn**
2. **Nut**
3. **Mount**
4. **Washer**
5. **Screw**

Figure 7-88. Horn: FXDL

GENERAL

The active exhaust system utilizes an actuator valve located in the rear exhaust pipe. The valve connects to a servo motor via a cable. The valve position automatically adjusts to enhance engine performance.

The active exhaust module is located in front of the battery tray. The attached cable is routed to a bellcrank on the rear exhaust pipe.

NOTE

ABS models: *The active exhaust cable is routed on the outside of the ABS module cover.*

REMOVAL

1. See Figure 7-89. Remove active exhaust cable housing (1) from notch in shroud (2). Remove ferrule (3) from active exhaust module to remove cable (4).
2. See Figure 7-90. Remove module fasteners (4) and washers (3) from battery tray (1).
3. Remove cable (5) from cable clip (7), cable clamp (6) and exhaust valve cable retainer (8).
4. **All but FXDF and FXDWG:** Remove screw (9), washer (10) and cable clip (11) from under battery tray.
5. Detach cable from exhaust head pipe to remove cable.

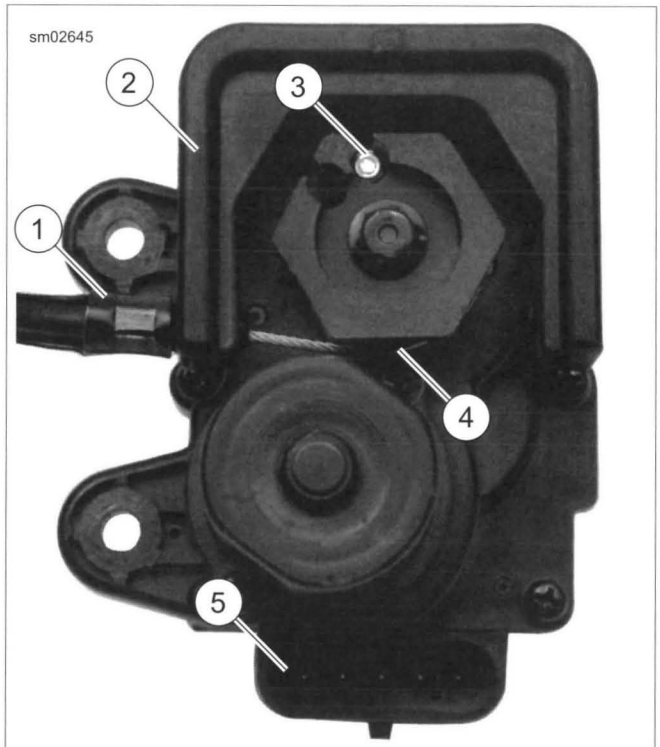

1. **Active exhaust cable housing**
2. **Shroud (HDI, Australia and England only)**
3. **Ferrule**
4. **Active exhaust cable**
5. **Active exhaust module connector [179]**

Figure 7-89. Active Exhaust Module

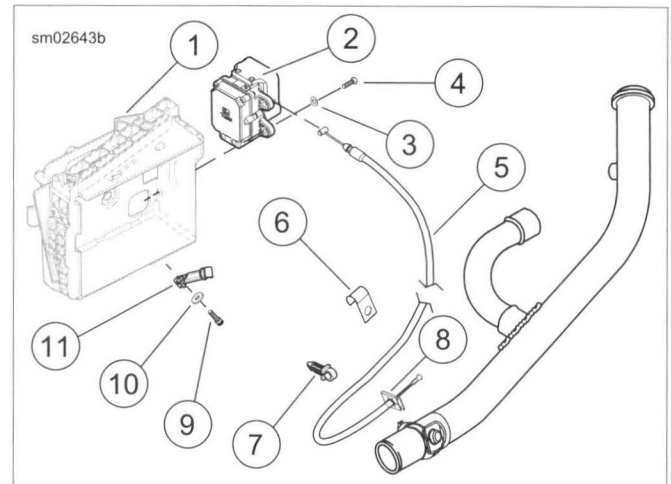

1. **Battery tray**
2. **Active exhaust module**
3. **Washer (2)**
4. **Module fastener (2)**
5. **Cable**
6. **Cable clamp**
7. **Cable clip**
8. **Exhaust valve cable retainer**
9. **Screw**
10. **Washer**
11. **Cable clip**

Figure 7-90. Active Exhaust

REPAIR

NOTE

See Figure 7-89. Shroud (2) can be replaced. Replace shroud if active exhaust cable housing (1) is a loose fit in shroud.

1. Remove fasteners securing shroud (2).
2. Replace shroud. Replace fasteners and tighten securely.

INSTALLATION

FASTENER	TORQUE VALUE	
Active exhaust module fasteners	36-60 **in-lbs**	4.0-6.8 Nm
Active exhaust cable clip screw	24-48 **in-lbs**	2.7-5.4 Nm

NOTE

Verify that active exhaust cable to does not contact rear exhaust pipe or any other part of the vehicle after installation.

1. See Figure 7-89. Install ferrule (3) into slot shown. Wrap cable counterclockwise around active exhaust module shroud as shown.
2. Clip cable housing into shroud (2).
3. Place active exhaust module into position in front of battery tray.
4. See Figure 7-90. Install module fasteners (4) and washers (3). Tighten to 36-60 **in-lbs** (4.0-6.8 Nm).

5. **All but FXDF and FXDWG:** Mount cable clip (11) with screw (9) and washer (10) to underside of battery tray. Tighten to 24-48 **in-lbs** (2.7-5.4 Nm).

6. See Figure 7-91. After installation, make sure that active exhaust cable is routed correctly. Cable must not contact the exhaust pipe, battery cover or transmission case.

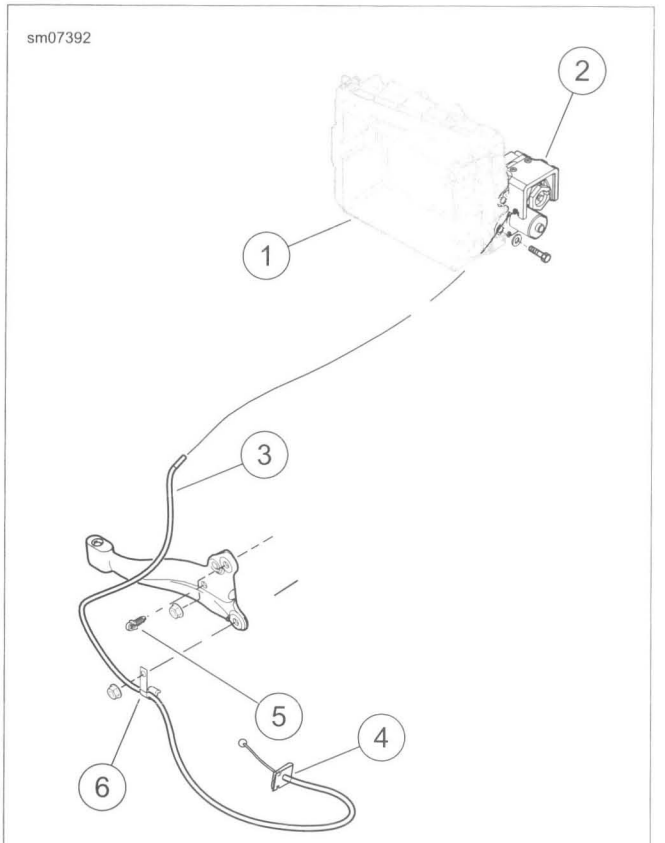

1. **Battery tray**
2. **Exhaust actuator**
3. **Active exhaust cable**
4. **Exhaust valve cable retainer**
5. **Clamp (mounted to muffler bracket)**
6. **Clamp (active exhaust cable)**

Figure 7-91. Active Exhaust Cable Retention: All HDI Models with Dual Exhaust Only

GENERAL

The main wiring harness is routed through the frame backbone. It has enough slack designed into it so that it can be pulled out of the front end of the backbone to access the connectors located inside the frame.

NOTE

See A.1 CONNECTORS, Connector Locations for a description of all connector locations.

REMOVAL

1. Remove seat.
2. **FLD models:** Remove saddlebags. See 2.34 SADDLEBAGS: FLD.

NOTES

- *Record wire routing and cable strap locations before removal.*
- *Main wire harness is removed from rear of vehicle through rear section of frame.*

3. **Security system:** Disarm system before removal of BCM and main harness.
4. **ABS models:** Loosen but do not remove fasteners attaching ABS module bracket to frame.

⚠WARNING

Disconnect negative (-) battery cable first. If positive (+) cable should contact ground with negative (-) cable connected, the resulting sparks can cause a battery explosion, which could result in death or serious injury. (00049a)

5. Disconnect both battery cables, negative battery cable first.
6. Remove battery.
7. Remove battery tray. See 7.10 BATTERY TRAY AND BATTERY CABLES.
8. Remove instrument console.
   a. **FXDF and FLD models:** See 7.21 INSTRUMENTS: FXDF AND FLD. On some models, removal includes removing the trim strip.
   b. **FXDB and FXDWG models:** See 7.22 INSTRUMENTS: FXDB, FXDBC, FXDBP AND FXDWG.
   c. **FXDL models:** See 7.23 INSTRUMENTS: FXDL.
   d. Disconnect [20] when removing instrument console.
9. See Figure 7-92. Disconnect fuel pump connector [141].
10. Remove fuel tank and detach fuel gauge connector [117]. See 4.4 FUEL TANK.
11. Remove muffler. See 4.15 EXHAUST SYSTEM.
12. Remove rear brake master cylinder. See 2.12 REAR BRAKE MASTER CYLINDER.
13. **HDI vehicles with dual exhaust:** Remove active exhaust module connector [179] on front of electrical caddy.

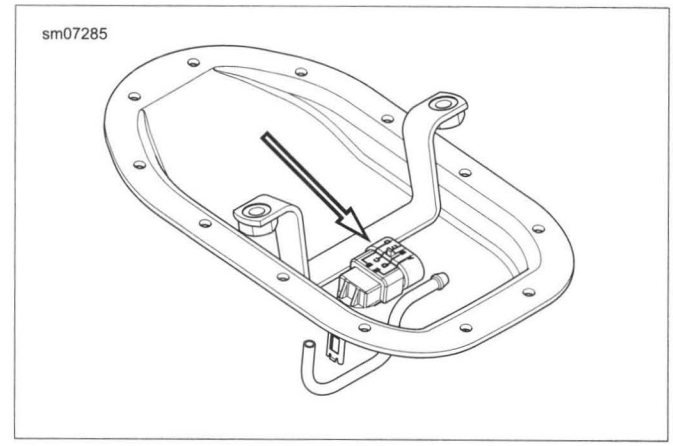

Figure 7-92. Fuel Pump Connector [141] (Typical)

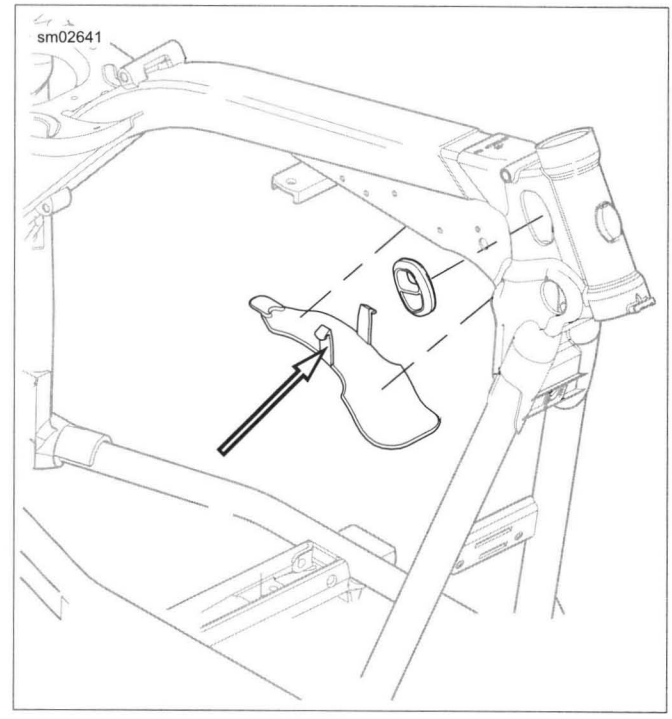

Figure 7-93. Harness Shield

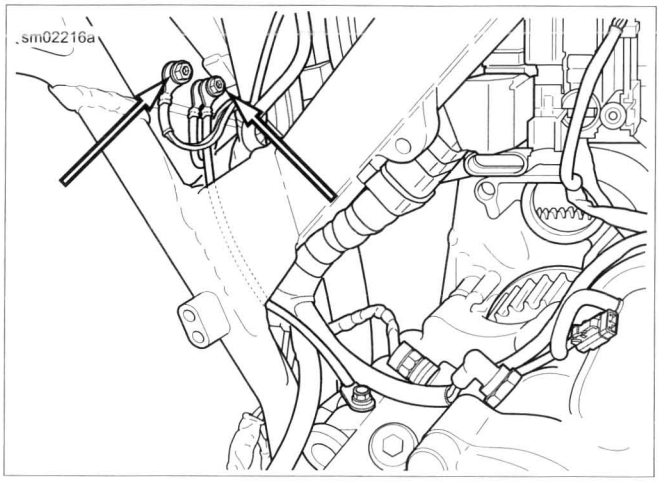

Figure 7-94. Vehicle Ground Studs

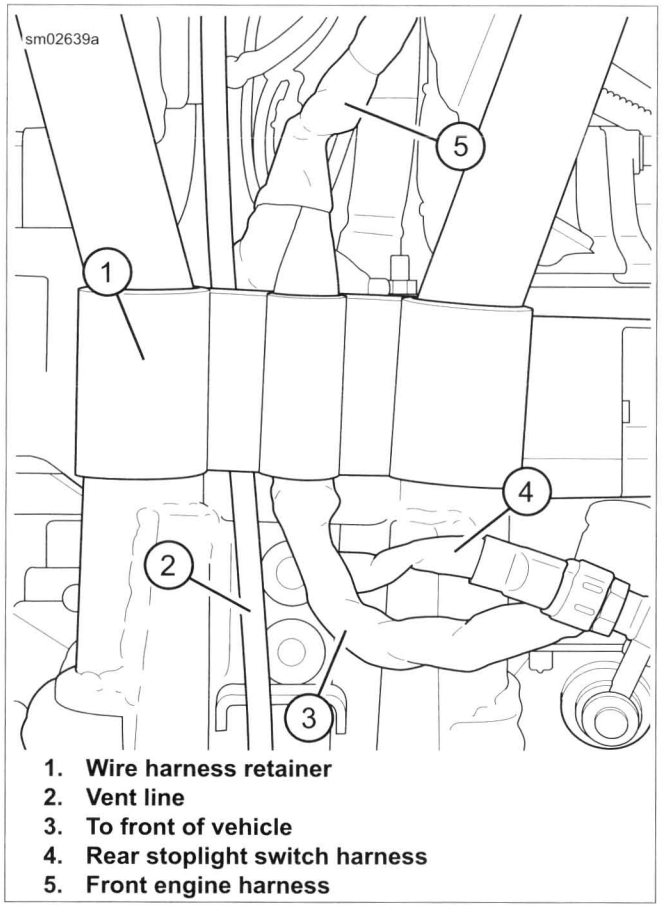

1. **Wire harness retainer**
2. **Vent line**
3. **To front of vehicle**
4. **Rear stoplight switch harness**
5. **Front engine harness**

Figure 7-95. Main Wire Harness Retainer

14. See Figure 7-93. Remove harness shield by pushing both tabs of shield in at the same time.
15. Pull harness connectors from inside frame.
16. Disconnect the following connectors:
    a. Right handlebar controls [22-1, 22-2]
    b. Left handlebar controls [24]
    c. Turn signals [31]
    d. Headlamp [38]
    e. Ignition switch [33]
    f. **ABS models:** Front wheel speed sensor [167]

NOTE

In next step, note location of ground wires before removal to verify proper installation.

17. See Figure 7-94. Remove ground wires from studs on frame.
18. Disconnect connectors located under seat:
    a. Accessory connector [4]
    b. Tail lamp harness connector [7]
    c. Rear oxygen sensor [137]
    d. **Security system:** Security siren connector [142]
    e. B+ connector [160]
    f. Jiffy stand sensor [133]
    g. **ABS models:** Rear wheel speed sensor [168]
    h. **ABS models:** ABS EHCU [166], electro hydraulic control unit
19. Disconnect starter solenoid [128].
20. Disconnect neutral switch.
21. Remove rear stop lamp switch terminals [121]. See 7.29 REAR STOPLAMP SWITCH.
22. Remove starter post nut, main wiring harness ring terminal and positive battery cable from starter post.
23. Remove rear fender. See 2.29 REAR FENDER.

NOTE

In order to access wire harness retainer, remove the lower shock bolts and lower rear fork.

24. See Figure 7-95. Slide wire harness retainer up frame tubes. Remove harness retainer from frame and harness.
25. Remove the following connectors located in fuel tank area:
    a. MAP sensor connector [80]
    b. Horn wires [122]
    c. IAT sensor connector [89]
    d. ET sensor connector [90]
    e. IAC connector [87]
    f. TP sensor connector [88]
    g. Front [84] and rear [85] fuel injector connectors
    h. ACR [203F & R], if equipped
    i. Intake solenoid connector [178] from air cleaner backplate

NOTES

- *Remove harness anchors from harness trough and frame.*
- *Do not reuse harness anchors.*

26. Disconnect:
    a. Voltage regulator [77]
    b. Crankshaft position sensor [79]
    c. Front oxygen sensor [138]
    d. Oil pressure switch [120]
27. Remove electrical caddy and ignition coil. See 7.3 ELECTRICAL CADDY.
28. Remove starter. See 7.11 STARTER

NOTE

The upper portion of the wiring harness is now free. Note routing before pulling harness out of position.

29. Attach a long thin wire to the top end of the wiring harness before pulling harness through frame backbone. This guide wire aids in pulling the **new** harness back through the backbone.
30. Gently pull wiring harness out of rear of frame tube.

INSTALLATION

FASTENER	TORQUE VALUE	
ABS module bracket	90-114 **in-lbs**	10.2-12.8 Nm

NOTES

- *Make sure to replace all cable straps and anchors.*
- *Do not remove factory installed wire harness tape securing connectors to harness unless necessary.*
- *Before installing starter, route all necessary cables and harnesses along top of crankcase.*

1. Guide wiring harness back into frame backbone. Pull the front of the harness through using the guide wire while pushing the harness through the frame tube opening.
2. Connect the following connectors:
    a. Right handlebar controls [22-1, 22-2]
    b. Left handlebar controls [24]
    c. Turn signals [31]
    d. Headlamp [38]
    e. Instruments [20]
    f. Ignition switch [33]
    g. **ABS models:** Front wheel speed sensor [167]

NOTE

Make sure to leave enough slack in harness at front of vehicle so when front wheel is turned, harness does not bind.

3. See Figure 7-96. Install connectors into frame. Install harness shield.
4. **ABS models:** Connect ABS components.
    a. ABS EHCU, electro hydraulic control module [166]
    b. Rear wheel speed sensor [168]
5. To ease installation, wrap voltage regulator terminals with electrical tape.
6. See Figure 7-95. Route engine harness (which contains voltage regulator connector [77], crankshaft position sensor connector [79], stator connector [46] and front oxygen sensor [138] wiring to front of vehicle. Install the oxygen sensor and crankshaft position sensor connectors in front electrical caddy, see 7.15 CRANK POSITION SENSOR (CKP). Connect the engine harness and stator connectors to the voltage regulator.
7. Install starter. See 7.11 STARTER.
8. Install starter post nut, positive battery cable and main wiring harness ring terminal to starter post.
9. Route rear brake switch wiring and connect to rear brake switch [121].
10. Route neutral switch wiring and connect to neutral switch [131].
11. Route starter solenoid wiring and connect to starter solenoid [128].
12. Install rear brake master cylinder and rear brake control. See 2.12 REAR BRAKE MASTER CYLINDER.
13. Secure front engine harness with harness clamps.
14. See Figure 7-97. Install wire harness retainer (1).

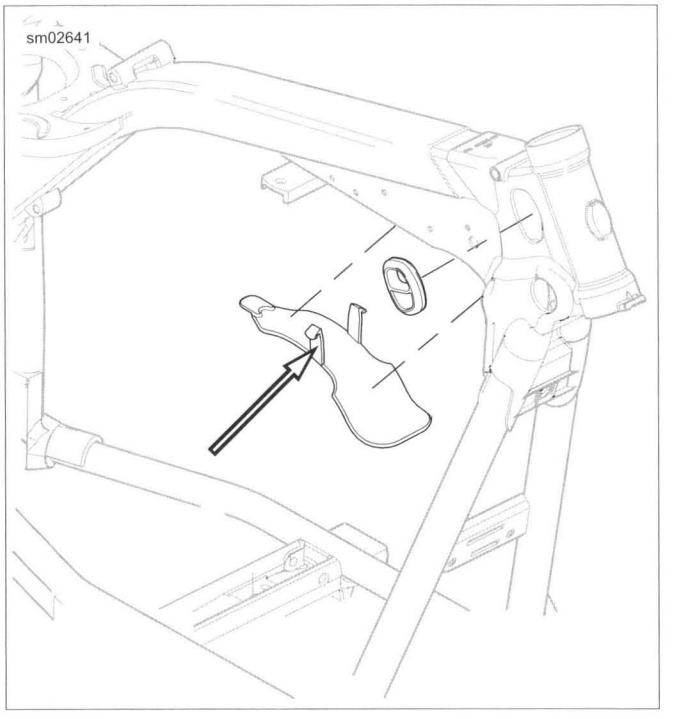

Figure 7-96. Harness Shield

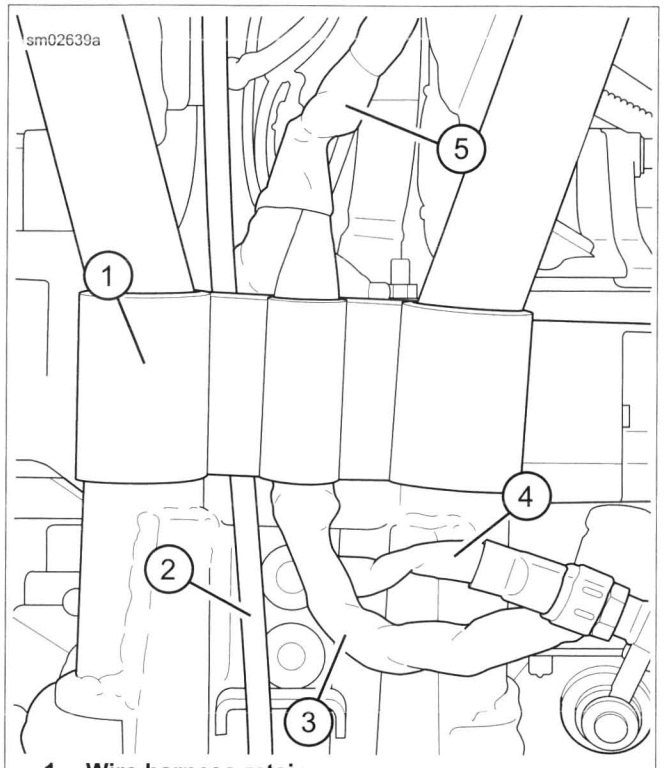

1. **Wire harness retainer**
2. **Vent line**
3. **To front of vehicle**
4. **Rear stoplight switch harness**
5. **Front engine harness**

Figure 7-97. Main Wire Harness Retainer

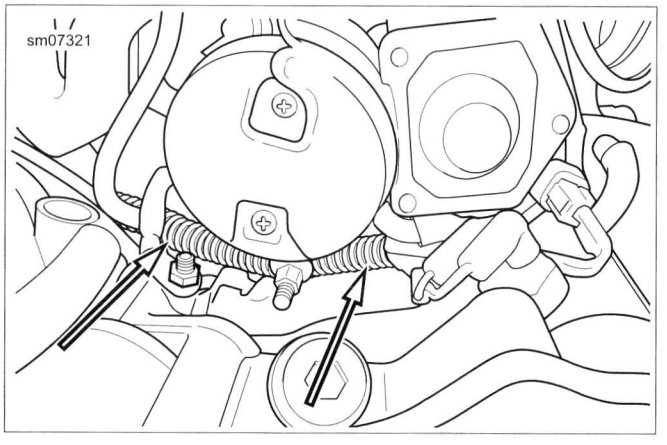

Figure 7-98. Wire Harness Routed Under Starter

NOTES

- *See Figure 7-95. To prevent contact with rear fork, front engine harness (5) and rear brake switch wiring must be secured in wire harness retainer (1).*
- *If equipped with jiffy stand sensor (HDI models only), route the sensor harness up along the vent line (2). Secure in the same retainer cavity as the vent line.*

15. Install rear stop lamp switch terminals. See 7.29 REAR STOPLAMP SWITCH.
16. Connect oil pressure switch [120].
17. See Figure 7-99. Connect vehicle speed sensor connector [65].
18. See Figure 7-100. Secure harness grounds to studs.
19. Route top engine harness to fuel tank area.
20. Connect:
    a. MAP sensor connector [80]
    b. Horn wires [122]
    c. IAT sensor connector [89]
    d. ET sensor connector [90]
    e. IAC connector [87]
    f. TP sensor connector [88]
    g. Front [84] and rear [85] fuel injector connectors
    h. ACR [203F&R], if equipped
    i. Intake solenoid connector [178] from air cleaner backplate
21. See Figure 7-101. Install wire harness retainer on frame tubes. Install harness retainer onto harness.
22. Install rear fender. See 2.29 REAR FENDER.
23. Install lower shock bolts through shocks and into rear fork.
24. Install electrical caddy, wiring and coil. See 7.3 ELECTRICAL CADDY.
25. See Figure 7-102. Mate connectors located under seat:
    a. Accessory connector [4], if used
    b. Tail lamp harness connector [7]
    c. Rear oxygen sensor [137]
    d. Security siren connector [142] if security siren installed
    e. B+ connector [160]
26. HDI models: Install active exhaust module connector [179] located in front of electrical caddy.
27. Install fuel tank. See 4.4 FUEL TANK. Connect fuel gauge connector [117].
28. See Figure 7-95. Connect fuel pump/sender connector [141].
29. For all models when installing instrument console connect [20].
30. Install instrument console.
    a. **FXDF and FLD models:** See 7.21 INSTRUMENTS: FXDF AND FLD.
    b. **FLD models:** Install trim strip and instrument console and disconnect [20].
    c. **FXDB, FXDBC, FXDBP and FXDWG models:** See 7.22 INSTRUMENTS: FXDB, FXDBC, FXDBP AND FXDWG.
    d. **FXDL models:** See 7.23 INSTRUMENTS: FXDL.
31. Install muffler. See 4.15 EXHAUST SYSTEM

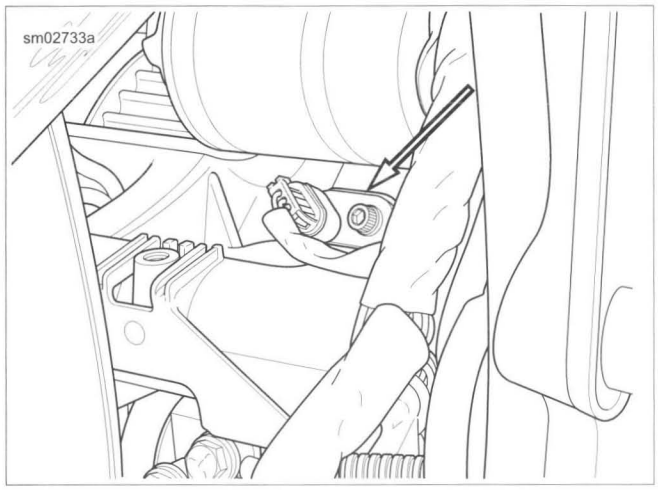

Figure 7-99. Vehicle Speed Sensor

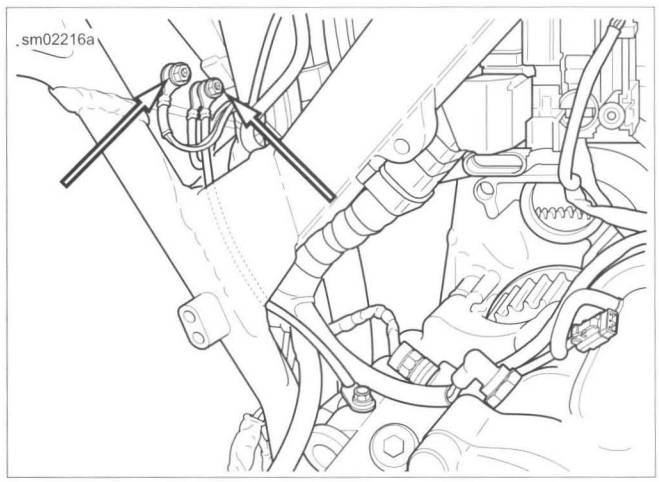

Figure 7-100. Vehicle Ground Studs

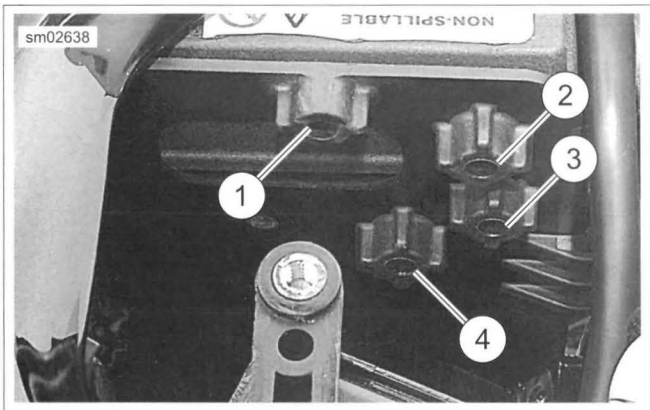

1. Tail lamp connector location
2. B+ connector location
3. Accessory connector location
4. Unused

Figure 7-101. Under Seat Connector Mounting Locations

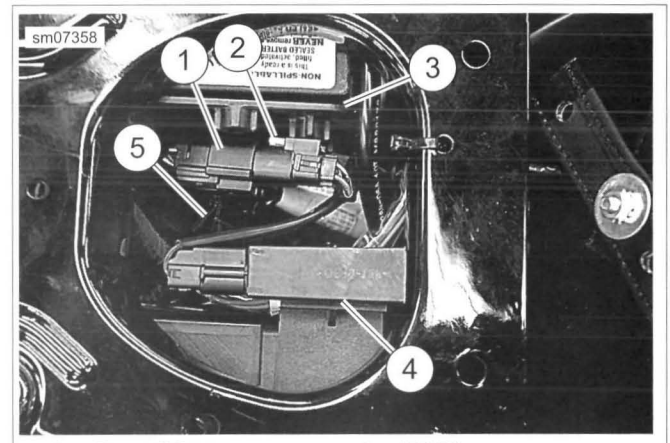

1. Rear O2 sensor connector [137]
2. Connector anchor
3. Battery tray
4. Security antenna
5. Tail lamp connector [7]

Figure 7-102. Rear O2 Sensor Connector Location

⚠WARNING

Connect positive (+) battery cable first. If positive (+) cable should contact ground with negative (-) cable connected, the resulting sparks can cause a battery explosion, which could result in death or serious injury. (00068a)

32. **ABS models:** Install the ABS module cover.
33. Install BCM and connect to main harness.
34. Install cable straps and anchors in correct locations after installing main wire harness.
35. Pull harness connectors inside of frame backbone. Install shield.

⚠WARNING

When any hydraulic brake component, line or connection is loosened or replaced on an ABS motorcycle, Digital Technician II must be used during the brake bleeding procedure to verify all air is removed from the system. Failure to properly bleed the brake system could adversely affect braking, which could result in death or serious injury. (00585c)

36. **ABS models:** Tighten fasteners attaching ABS module bracket to frame. Tighten to 90-114 **in-lbs** (10.2-12.8 Nm).
37. Install battery tray. See 7.10 BATTERY TRAY AND BATTERY CABLES.
38. Install battery.
39. Connect both battery cables, positive battery cable first.
40. Arm security, if equipped.
41. **FLD models:** Install saddlebags. See 2.34 SADDLEBAGS: FLD.

⚠WARNING

After installing seat, pull upward on seat to be sure it is locked in position. While riding, a loose seat can shift causing loss of control, which could result in death or serious injury. (00070b)

42. Install seat.

⚠WARNING

Be sure that all lights and switches operate properly before operating motorcycle. Low visibility of rider can result in death or serious injury. (00316a)

43. Turn ignition switch ON. Test all electrical components for correct operation.

GENERAL

The left hand control module includes headlamp HI - LO, horn, trip and left turn signal functions. The right hand control module includes engine start, RUN - OFF, right turn signal and flasher functions. The left and right hand control modules are non-repairable.

NOTES

- *On certain models, the turn signal wiring is hard wired to the hand control modules.*
- *To replace the right or left hand control modules, see 7.35 RIGHT HANDLEBAR CONTROL MODULE or 7.34 LEFT HANDLEBAR CONTROL MODULE.*

REPAIR PROCEDURES

PART NUMBER	TOOL NAME
HD-25070	ROBINAIR HEAT GUN
HD-39969	ULTRATORCH
HD-41183	HEAT SHIELD ATTACHMENT

1. Push conduit back to better access wires and avoid damaging conduit with radiant heating device. Secure conduit with cable strap.
2. Strip 0.5 in (12.7 mm) of insulation off switch wires. Twist stripped ends of switch wires until all strands are tightly coiled.
3. Cut dual wall heat shrink tubing, supplied in repair kit into 1.0 in (25.4 mm) segments. Slide tubing over each wire of **new** switch assembly.
4. Splice existing and **new** switch wires, matching wire colors. Solder the spliced connections. For best results, splice one wire at a time.
5. Center the heat shrink tubing over the soldered splices.

⚠WARNING

Be sure to follow manufacturer's instructions when using the UltraTorch UT-100 or any other radiant heating device. Failure to follow manufacturer's instructions can cause a fire, which could result in death or serious injury. (00335a)

- Avoid directing heat toward any fuel system component. Extreme heat can cause fuel ignition/explosion resulting in death or serious injury.
- Avoid directing heat toward any electrical system component other than the connectors on which heat shrink work is being performed.
- Always keep hands away from tool tip area and heat shrink attachment.

6. See Figure 7-103. Use ULTRATORCH (Part No. HD-39969) or ROBINAIR HEAT GUN (Part No. HD-25070) with HEAT SHIELD ATTACHMENT (Part No. HD-41183) or equivalent. Uniformly heat the heat shrink tubing to insulate and seal the soldered connections. Apply heat just until the meltable sealant exudes out both ends of tubing and assumes a smooth cylindrical appearance.
7. Inspect solder connection.
   a. Inspect the melted sealant for solder beads.
   b. Excess solder or heat can force out some solder with the melted sealant.
   c. Remove any solder found.
   d. Briefly heat the connection to reseal the tubing if solder beads were removed.
   e. Use less solder or reduce heating time or intensity when doing subsequent splices.

⚠WARNING

Be sure that all lights and switches operate properly before operating motorcycle. Low visibility of rider can result in death or serious injury. (00316a)

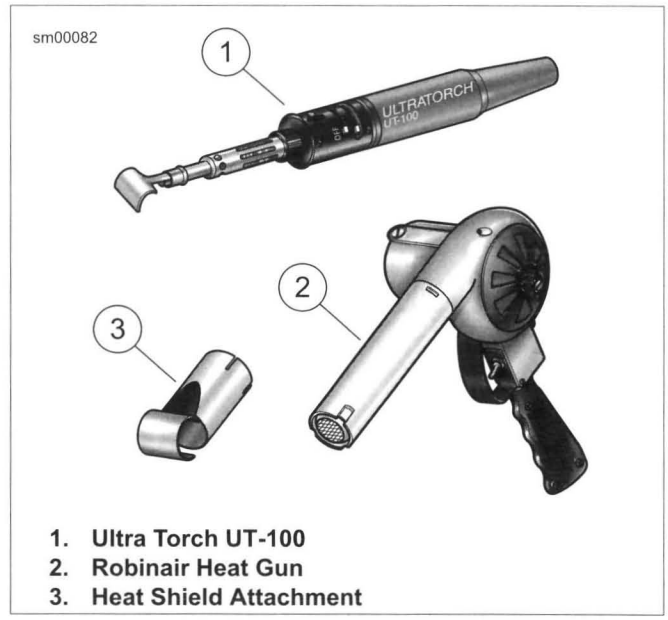

1. **Ultra Torch UT-100**
2. **Robinair Heat Gun**
3. **Heat Shield Attachment**

Figure 7-103. Radiant Heating Devices

REMOVAL

⚠WARNING

To prevent accidental vehicle start-up, which could cause death or serious injury, remove main fuse before proceeding. (00251b)

1. Remove main fuse.
2. Remove rubber grommets on each side of the frame.
3. Disconnect left hand control connector (8).
4. Loosen the upper handlebar clamp-to-clutch lever screws.
5. Remove the upper and lower module housing screws. Remove upper switch housing.
6. See Figure 7-104. Remove screws (3) and retainer (1).
7. Carefully remove clutch switch (2) and left hand control module from lower housing.

NOTE

Record wire routing along with clamp and cable strap locations before removal.

8. Remove left hand control module.

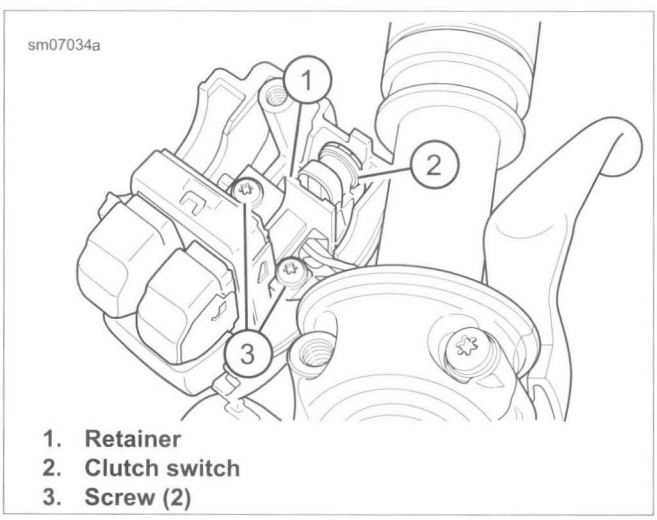

1. **Retainer**
2. **Clutch switch**
3. **Screw (2)**

Figure 7-104. Left Handlebar Control Module and Clutch Switch Retainer

CLUTCH SWITCH REPLACEMENT

FASTENER	TORQUE VALUE	
Handlebar switch assembly retainer screws	8-10 **in-lbs**	0.9-1.1 Nm

1. Remove upper switch housing cover. See 7.34 LEFT HANDLEBAR CONTROL MODULE, Removal.
2. See Figure 7-104. From inside the switch housing, remove screws (3) and retainer (1). Remove clutch switch (2) from housing.
3. Cut wires flush at inoperative clutch switch.
4. If **new** clutch switch wires have terminals installed, cut wires at terminal end.
5. Remove 0.25-0.3125 in (6.4-7.9 mm) of insulation from each wire end.
6. Cut two pieces of dual wall heat shrink tubing to 0.5 in (12.7 mm).
7. Solder wires together and cover with heat shrink tubing. See 7.33 HANDLEBAR CONTROL MODULES, Repair Procedures.
8. See Figure 7-104. Install clutch switch (2) into housing. Install retainer (1) and screws (3). Tighten screws to 8-10 **in-lbs** (0.9-1.1 Nm).
9. Assemble left handlebar switch housing. See 7.34 LEFT HANDLEBAR CONTROL MODULE, Installation.

INSTALLATION

FASTENER	TORQUE VALUE	
Handlebar module assembly retainer screws	8-10 **in-lbs**	0.9-1.1 Nm
Handlebar clutch lever clamp screws	60-80 **in-lbs**	6.8-9.0 Nm
Hand control module housing screws	35-45 **in-lbs**	4.0-5.1 Nm

NOTE

When installing the left hand control module and retainer, do not pinch wires. Verify that the rubber grommet on the wire harness is properly placed on the housing.

1. See Figure 7-104. Place hand control module into position on lower housing. Install clutch switch (2).

NOTES

- ***FXDWG models:*** *See Figure 7-106. When installing left hand control module, make sure the clamping surface (1) stays within the range marks (2) or damage to the wires occurs.*
- ***FXDF and FXDL models:*** *Use care as rotation of the controls too far can cause harness damage.*

2. See Figure 7-104. Install retainer (1) with screws (3). Tighten to 8-10 **in-lbs** (0.9-1.1 Nm).
3. Position the upper module housing over the handlebar and lower module housing.
4. Start the upper and lower module housing screws, but do not tighten.
5. See Figure 7-105. Position the clutch hand lever assembly inboard of the module housing assembly, engaging the tab (3) on the lower module housing in the groove (2) at the bottom of the clutch lever bracket.
6. Align the holes in the handlebar clutch lever clamp with the holes in the clutch lever bracket. Start the two screws (with flat washers). Position for rider comfort. Beginning with the top screw, tighten to 60-80 **in-lbs** (6.8-9.0 Nm).

NOTE

Always tighten lower switch housing screw first, so that any gap between upper and lower housings is at front of switch.

7. Tighten module housing screws to 35-45 **in-lbs** (4.0-5.1 Nm).
8. Connect left-hand control connector.
9. Secure harness with clamps and cable strap as noted during removal.
10. Install main fuse. See 7.8 FUSES.

⚠WARNING

Be sure that all lights and switches operate properly before operating motorcycle. Low visibility of rider can result in death or serious injury. (00316a)

11. Test the switches for proper operation.

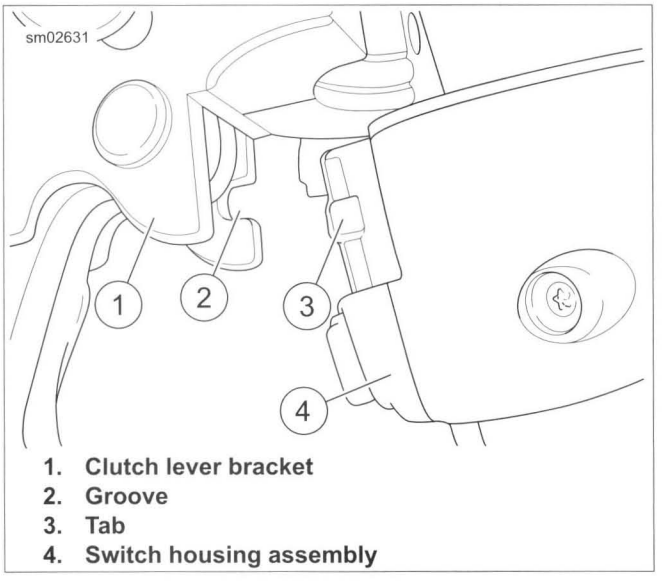

1. **Clutch lever bracket**
2. **Groove**
3. **Tab**
4. **Switch housing assembly**

Figure 7-105. Clutch Lever Bracket



1. **Clamping surface**
2. **Range marks**

Figure 7-106. Left Hand Control Assembly to Handlebar Alignment: FXDWG Models

REMOVAL

⚠WARNING

To prevent accidental vehicle start-up, which could cause death or serious injury, remove main fuse before proceeding. (00251b)

1. Remove main fuse.
2. See 7.32 MAIN WIRING HARNESS. Remove rubber grommets on each side of the frame and disconnect right hand control connectors.
3. Loosen the upper handlebar clamp to master cylinder housing screw. Remove the lower handlebar clamp to master cylinder housing screw.
4. Remove upper and lower switch housing screws.

NOTE

The friction shoe is a loose fit. It may fall out or become dislodged if the lower switch housing is turned upside down or shaken.

5. Remove the friction shoe from the end of the tension adjuster screw.
6. Loosen cable adjusters. See 1.12 THROTTLE CABLES.
7. See Figure 7-107. Remove the brass ferrules (4) from the notches on the inboard side of the throttle control grip. Remove the ferrules from the cable end fittings.
8. Remove the throttle control grip from the end of the handlebar.
9. See Figure 7-108. If replacing lower switch housing,
   a. Pull the crimped inserts at the end of the throttle and idle control cable housings from the lower switch housing.
   b. For best results, use a rocking motion while pulling.
   c. Place a drop of light oil on the retaining rings, if necessary.
   d. Remove the cables from the switch housing.
10. See Figure 7-109. Remove screws (3) and retainer (1).

NOTE

Record wire routing before removal.

11. Carefully remove brake switch (2) and right hand control module from lower housing. Remove right hand control module.

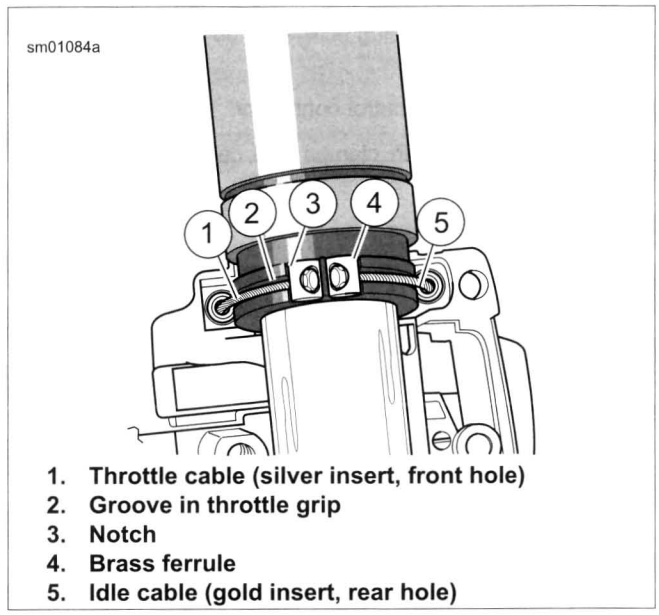

1. **Throttle cable (silver insert, front hole)**
2. **Groove in throttle grip**
3. **Notch**
4. **Brass ferrule**
5. **Idle cable (gold insert, rear hole)**

Figure 7-107. Throttle Cable Attachment

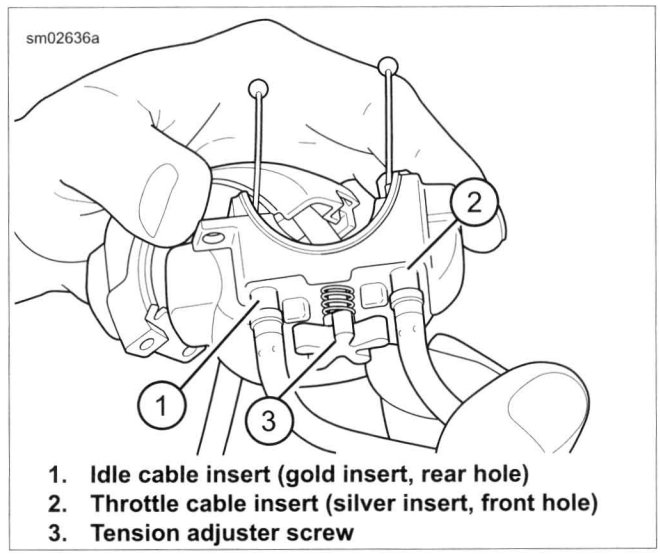

1. **Idle cable insert (gold insert, rear hole)**
2. **Throttle cable insert (silver insert, front hole)**
3. **Tension adjuster screw**

Figure 7-108. Right Lower Module Housing

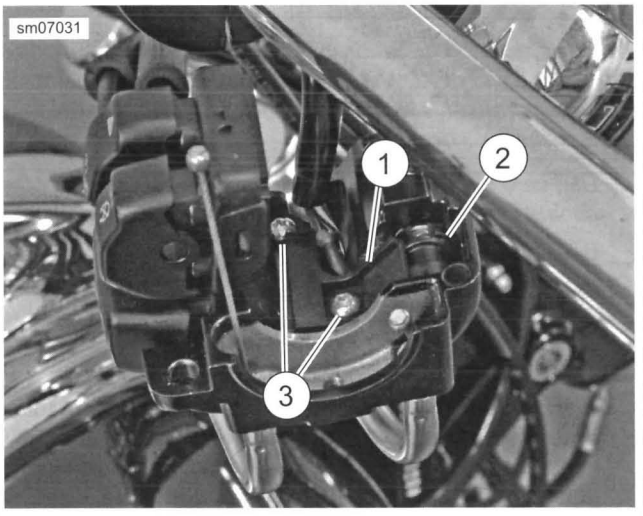

1. **Retainer**
2. **Brake switch**
3. **Screw (2)**

Figure 7-109. Right Control Module and Brake Switch Retainer

FRONT BRAKE SWITCH REPLACEMENT

FASTENER	TORQUE VALUE	
Handlebar switch assembly retainer screws	8-10 **in-lbs**	0.9-1.1 Nm

1. Remove upper switch housing cover. See 7.35 RIGHT HANDLEBAR CONTROL MODULE, Removal.
2. See Figure 7-109. From inside the switch housing, remove screws (3) and retainer (1). Remove brake switch (2) from housing.
3. Cut wires flush at inoperative brake switch.
4. If **new** brake switch wires have terminals installed, cut wires at terminal end.
5. Remove 0.25-0.3125 in (6.4-7.9 mm) of insulation from each wire end.
6. Cut two pieces of dual wall heat shrink tubing to 0.5 in (12.7 mm).
7. Solder wires together and cover with heat shrink tubing. See 7.33 HANDLEBAR CONTROL MODULES, Repair Procedures.
8. See Figure 7-109. Install brake switch (2) into housing. Install retainer (1) and screws (3). Tighten screws to 8-10 **in-lbs** (0.9-1.1 Nm).
9. Assemble right handlebar switch housing. See 7.35 RIGHT HANDLEBAR CONTROL MODULE, Installation.

INSTALLATION

FASTENER	TORQUE VALUE	
Handlebar module assembly retainer screws	8-10 **in-lbs**	0.9-1.1 Nm
Handlebar master cylinder clamp screws	60-80 **in-lbs**	6.8-9.0 Nm
Hand control module housing screws	35-45 **in-lbs**	4.0-5.1 Nm

NOTE

When installing the left hand control module and retainer, do not pinch wires. Verify that the rubber grommet on the wire harness is properly placed on the housing.

1. See Figure 7-109. Place control module into position on module housing. Install brake switch (2).
2. Install retainer (1) with screws (3). Tighten screws to 8-10 **in-lbs** (0.9-1.1 Nm).
3. See Figure 7-108. If previously removed from lower module housing, push the throttle and idle control cables into the lower module housing until they snap in place. Note the different diameter inserts crimped into the end of the throttle and idle cable housings.
   a. Push the throttle cable insert (2) of throttle cable housing into the hole in front of tension adjuster screw (3).
   b. Push the idle cable insert (1) of idle cable housing into the hole at the rear of tension adjuster screw (3).

NOTE

To aid assembly, place a drop of light oil on the retaining rings of the crimped inserts. Always replace the retaining rings if damaged or distorted.

4. Slide the throttle control grip over the end of the right handlebar until it bottoms against the closed end. Rotate the grip so that the ferrule notches are at the top. To prevent binding, pull the grip back about 1/8 in (3.2 mm).
5. With the concave side facing upward, install the friction shoe so that the pin hole is over the point of the adjuster screw.

NOTE

The friction shoe is a loose fit. It may fall out or become dislodged if the lower module housing is turned upside down or shaken.

6. See Figure 7-107. Position lower module housing beneath the throttle control grip. Install the brass ferrules (4) onto the cable so that the end fittings seat in the ferrule recess. Seat the ferrules in their respective notches (3) on the throttle control grip. Verify that the cables are captured in the grooves (2) molded into the grip.



1. **Clamping surface**
2. **Range marks**

Figure 7-110. Right Hand Control Assembly to Handlebar Alignment: FXDWG Models

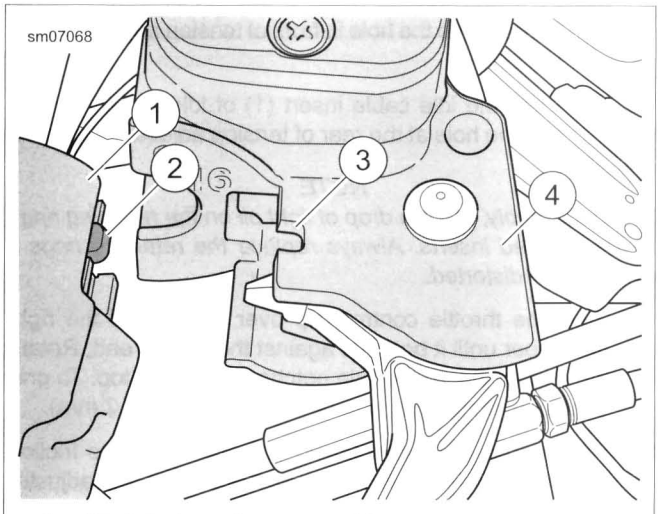

1. **Module housing assembly**
2. **Tab**
3. **Groove**
4. **Brake lever bracket**

Figure 7-111. Module Housing Alignment

NOTES

- *See Figure 7-110. When installing right handlebar module assembly on FXDWG models, make sure the clamping surface (1) stays within the range marks (2) or damage to the wires will occur.*
- *Use care with FXDF and FXDL models as rotation of the controls too far can cause harness damage.*

7. Position the upper module housing over the handlebar and lower module housing.
8. Start the upper and lower module housing screws, but do not tighten.
9. See Figure 7-111. Position the brake lever/master cylinder assembly inboard of the module housing assembly, engaging the tab (2) on the lower module housing in the groove (3) at the top of the brake lever bracket.
10. Install the lower handlebar clamp to master cylinder housing screw (with flat washer). Position for rider comfort. Beginning with the top screw, tighten to 60-80 **in-lbs** (6.8-9.0 Nm).
11. Tighten lower and upper module housing screws to 35-45 **in-lbs** (4.0-5.1 Nm).

NOTE

Always tighten lower switch housing screw first, so that any gap between upper and lower housings is at front of switch.

12. Adjust throttle cables. See 2.21 THROTTLE CONTROL.
13. Connect right hand control connectors.
14. Secure harness with clamps and cable strap as noted during removal.
15. Install main fuse. See 7.8 FUSES.

⚠WARNING

Be sure that all lights and switches operate properly before operating motorcycle. Low visibility of rider can result in death or serious injury. (00316a)

16. Test the switches for proper operation.

FOB BATTERY

Battery Replacement Schedule

Replace the fob battery every year.

Battery Replacement

1. Open the fob case.
   a. See Figure 7-112. Place a thin blade in the thumbnail slot (1) between the two halves of the case.
   b. Slowly twist the blade.

NOTE

Use a CR2032 or equivalent battery.

2. Install a new battery with the positive side down.
3. Close the case.
   a. See Figure 7-112. With O-ring (3) in place, align case halves.
   b. Snap case halves together.

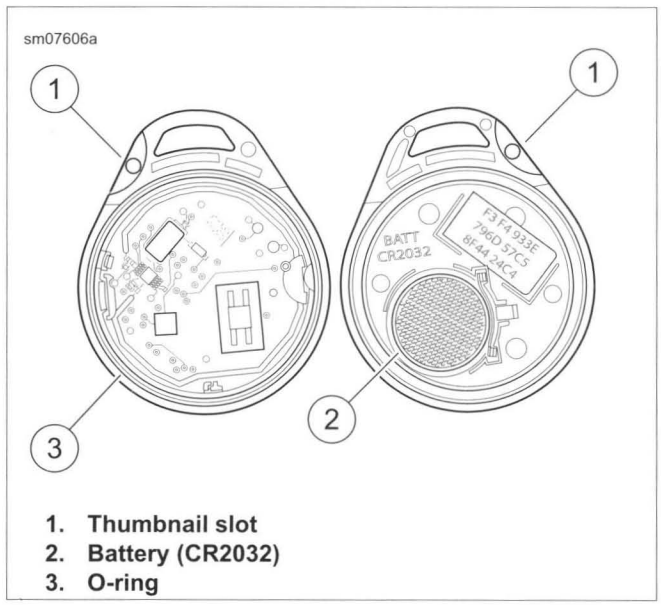

1. **Thumbnail slot**
2. **Battery (CR2032)**
3. **O-ring**

Figure 7-112. Open Fob

SMART SIREN (IF INSTALLED)

Battery Replacement Schedule

The siren internal 9 V battery is rechargeable and does not require regular replacement. Battery life under normal conditions is approximately 3-6 years.

NOTE

If the motorcycle battery is less than 12.5 V, the internal siren battery may not charge.

Battery Replacement

1. Disarm system. Remove siren.
2. See Figure 7-113. With a small screwdriver, push the catches (1) in through the two slots (2) in the end of the siren. Release the battery cover (3).

NOTES

- *For protection against corrosion, battery terminals and battery clip are covered with a special grease. Do not wipe away this substance. Apply all available existing grease to terminals on* ***new*** *battery.*
- *Use only a 9 V nickel metal hydride battery in the siren.*

3. Replace 9 volt battery (4) by removing old battery from polarized battery clip.
4. Recharge and install or install a **new** 9 volt nickel metal hydride battery.
5. Install cover (3).
   a. Carefully replace the rubber seal (5) on the cover.
   b. Align battery cover with case placing round corners on cover away from connector [142A] (6).
   c. Snap cover into place.
6. Install siren and check operation. Two chirps after an arming command indicate a working siren.

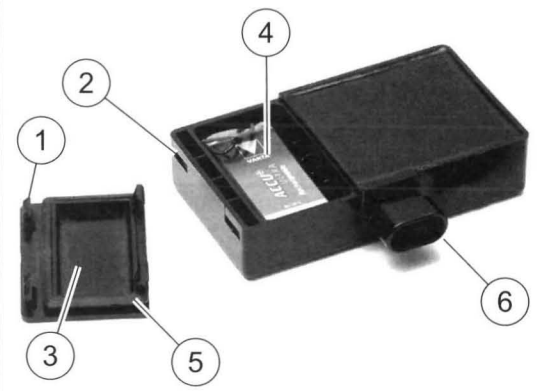

1. **Catch (2)**
2. **Slot (2)**
3. **Cover**
4. **9V battery**
5. **Rubber seal**
6. **Connector [142A]**

Figure 7-113. Battery Compartment

GENERAL

The PIN consists of five digits. Each digit can be any number from 1 through 9. There can be no zeros (0) in the PIN. Use the PIN to disarm the security system in case the fob becomes unavailable.

CHANGING THE PIN

The rider can change the PIN at any time. Refer to Table 7-12.

Modifying an Existing PIN

If a PIN was previously entered, the odometer will display the equivalent digit. Each additional press of the left turn switch will increment the digit.

Examples:

- To advance from 5 to 6, press and release the left turn switch 1 time.
- To advance from 8 to 2, press and release the left turn switch 3 times (9-1-2).

Table 7-12. Changing the PIN

STEP NO.	ACTION	WAIT FOR CONFIRMATION	NOTES
1	Select a 5-digit (1 thru 9) PIN and record on the wallet card from owner's manual.		
2	With an assigned fob present, turn the engine stop switch to **OFF**.		
3	Turn the ignition switch to **IGN**.		
4	Cycle the OFF/RUN switch twice: **RUN - OFF - RUN - OFF - RUN**.		
5	Press **left** turn signal switch **two times**.	ENTER PIN will scroll through the odometer window.	
6	Press **right** turn signal switch **one time** and release.	Turn signals will flash three times. Current PIN will appear in odometer. The first digit will be flashing.	
7	Enter first digit of new PIN by pressing and releasing the **left** turn signal switch until the selected digit appears.		
8	Press **right** turn signal switch **one time** and release.	The new digit will replace the current in odometer window.	
9	Enter second digit of selected PIN by pressing and releasing the **left** turn signal switch until the selected digit is present.		
10	Press **right** turn signal switch **one time** and release.	The new digit will replace the current in odometer window.	
11	Enter third digit of the selected PIN by pressing and releasing the **left** turn signal switch until the selected digit is present.		
12	Press **right** turn switch **one time** and release.	The new digit will replace the current in odometer window.	
13	Enter fourth digit of new PIN by pressing and releasing the **left** turn signal switch until the selected digit is present.		
14	Press **right** turn switch **one time** and release.	The new digit will replace the current in odometer window.	
15	Enter fifth digit of the new PIN by pressing and releasing the **left** turn signal switch until the selected digit is present.		

Table 7-12. Changing the PIN

STEP NO.	ACTION	WAIT FOR CONFIRMATION	NOTES
16	Press **right** turn switch **one time** and release.	The new digit will replace the current in odometer window.	
17	Turn the engine stop switch **OFF**, then turn the ignition switch to **OFF**.		Pushing the engine stop switch to **OFF** stores the new PIN in the module.

SIDECAR CONFIGURATION

⚠WARNING

Do not add sidecar to this motorcycle. Operating motorcycle with sidecar can cause loss of vehicle control, which could result in death or serious injury. (00590d)

ACTIVATION

Activation consists of assigning two fobs to the system and entering an initial PIN.

NOTE

If the fob is lost or inoperable, the PIN allows the owner to disarm the system. See 7.37 PERSONAL IDENTIFICATION NUMBER (PIN), Changing The PIN.

1. Configure the security system by assigning both fobs to the vehicle.
2. Configure the security system by entering a PIN picked by the owner.

Record the PIN in the owner's manual. Instruct the customer to carry a copy (use the wallet card found in the owner's manual). See 7.37 PERSONAL IDENTIFICATION NUMBER (PIN).

Once the system has been activated, it "arms" within 5 seconds of switching the IGN switch to OFF and no motorcycle motion.

FOB ASSIGNMENT

PART NUMBER	TOOL NAME
HD-48650	DIGITAL TECHNICIAN II

Use DIGITAL TECHNICIAN II (Part No. HD-48650) to assign both fobs to the H-DSSS. Follow the menu prompts to scan the fob serial number with the bar code reader. Alternatively, enter the number using the keyboard. The initial PIN entry should be performed using DIGITAL TECHNICIAN II (Part No. HD-48650) in conjunction with fob assignment.

NOTE

Each fob has a unique serial number. Attach fob label to a blank NOTES page in the owner's manual for reference.